University Of Misan

College Of Engineering

Petroleum Eng. Dep.

2014

# The Brief In Oil Well Drilling

Mahmood Jassim AL-Khafaji

((وفوق كل ذي علم عليم))

# HISTORICAL BRIEF :

The earliest known for mankind where oil wells in China in (347 A.D.). These wells had depths of up to about 243.84 meters (800 ft) and were drilled using bits attached to bamboo poles. The Chinese were burning oil to evaporate the brine in order to produce salt, and an extensive bamboo pipelines network was used to deliver oil to salt springs. In (1594 A.D.) were dug by men manually (hand dug) up to 35 meters deep and that was at Baku, Azerbaijan. In (1802 A.D.) a 58-ft (18 meters) well was drilled using a spring pole in the Kanawha Valley of West Virginia by the brothers David and Joseph Ruffner to produce brine. The well took 18 months to drill.

In (1815 A.D.) Oil was produced in United States as an undesirable by-product from brine wells in Pennsylvania. In (1848 A.D.) First modern oil well was drilled in Asia, on the Aspheron Peninsula north-east of Baku, Azerbaijan by Russian engineer F.N. Semyenov . In (1854 A.D.) First oil wells in Europe were drilled 30- to 50-meters (98-164 ft) deep at Bóbrka, Poland by Ignacy Lukasiewicz . In (1858 A.D.) First oil well in North America is drilled in Ontario, Canada. In (1859 A.D.) First oil well in United States was drilled 69 feet (21 meters) deep at Titusville, Pennsylvania by Colonel Edwin Drake. That well was producing only about 10 barrels/day.



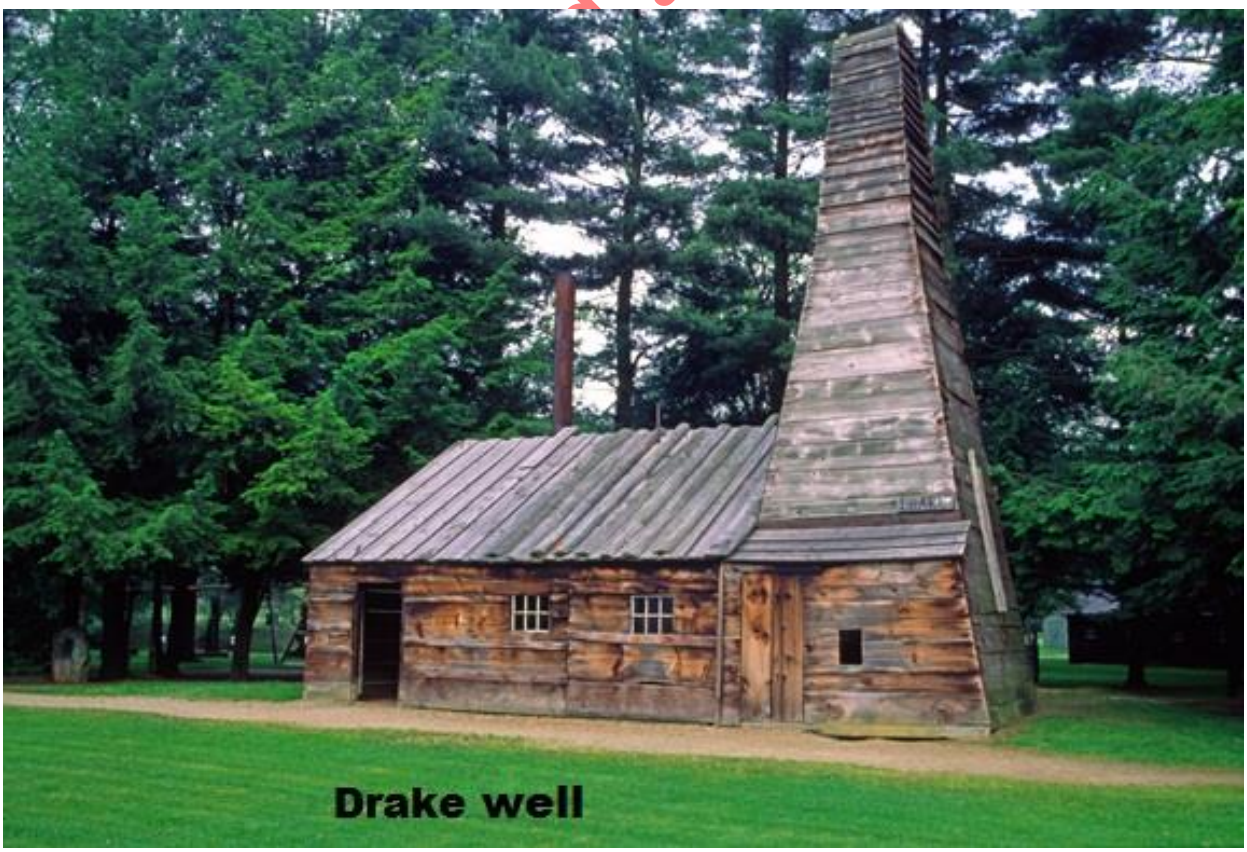

The oil industry in Iraq began at a place near Kirkuk city called ( Baba Gurgur field). The field is known for the Eternal Fire - a gas seep that has burned for at least 4,000 years. The discovery well was drilled in April 1927, by the Turkish Petroleum Company on Kurdish lands about six miles from Kirkuk. The well blew out at (3:00 AM)on morning of October 15th ,at a depth of about 1500 feet (457 meters), and began spraying the countryside with oil. Seven hundred tribesmen were recruited to build a levee around the well to contain the oil, which created the river of oil shown in the photo below. The well was finally brought under control after eight and a half days, flowing at a rate of 95,000 barrels of oil a day.

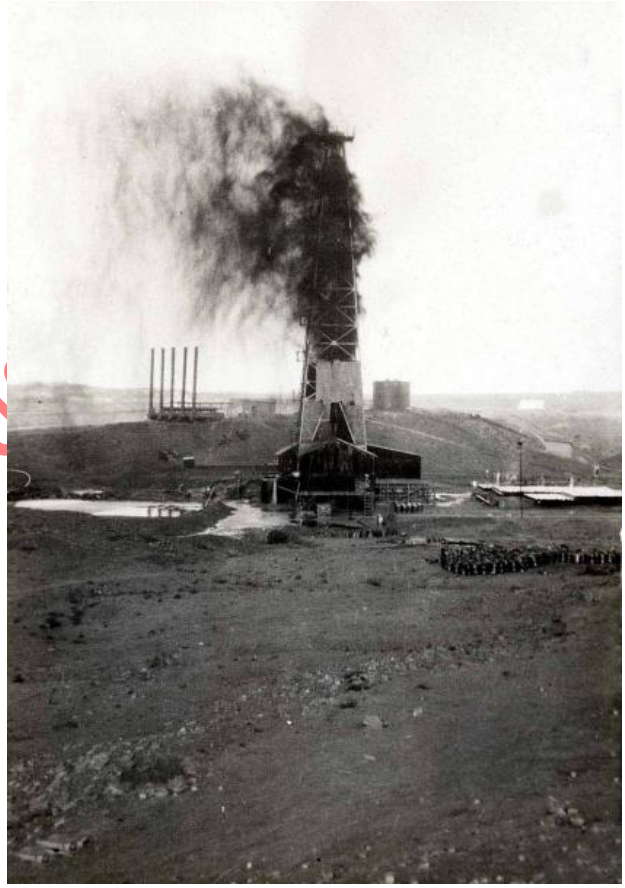

# THE WELL

An oil well is any bore drilled through the Earth's subsurface layers and it is designed to find and gain hydrocarbons. The well is being drilled by complex dangerous methods called (drilling process) ,these methods will be discussed later. The well that is designed to produce mainly or only gas may be termed a gas well .each well has a criterion called well life which is divided into segments are:

-planning.

-drilling.

-Completion.

-production.

-abandonment .

1-well planning: Well planning is perhaps the most demanding aspect of drilling engineering. It requires the integration of engineering principles, corporate or personal philosophies, and experience factors. Although well planning methods and practices may vary within the drilling industry, the end result should be a safely drilled, minimum-cost hole that satisfies the reservoir engineer's requirements for oil and (or) gas production.

2-drilling: complicated methods used to create cemented(cased) oil or gas well use heavy duty tools and at the same time very developed In terms of technological advance , these methods developed during time. The drilling process is very expensive and dangerous (discussed later).

3-completion: Completion is the process in which the well is enabled to produce oil or gas, Contains:

- cased-hole completion, small holes called perforations are made in the portion of the casing which passed through the production zone, to provide a path for the oil to flow from the surrounding rock into the production tubing.

-open hole completion, often 'sand screens' or a 'gravel pack' is installed in the last drilled, uncased reservoir section. These maintain structural integrity of the wellbore in the absence of casing, while still allowing flow from the reservoir into the wellbore.

4-production: The production stage is the most important stage of a well's life, when the oil and gas are produced. By this time, the oil rigs and workover rigs used to drill and complete the well have moved off the wellbore, and the top is usually outfitted with a collection of valves called a Christmas tree or production tree. These valves regulate pressures, control flows, and allow access to the wellbore in case further completion work is needed. From the outlet valve of the

production tree, the flow can be connected to a distribution network of pipelines and tanks to supply the product to refineries, natural gas compressor stations, or oil export terminals.

5-Abandonment: A well is said to reach an "economic limit" when its most efficient production rate does not cover the operating expenses, including taxes The economic limit for oil and gas wells can be expressed using special formulas. At the economic limit there often is still a significant amount of unrecoverable oil left in the reservoir. It might be tempting to defer physical abandonment for an extended period of time, hoping that the oil price will go up or that new supplemental recovery techniques will be perfected. In these cases, temporary plugs will be placed downhole and locks attached to the wellhead to prevent tampering. There are thousands of "abandoned" wells throughout North America, waiting to see what the market will do before "permanent" abandonment. Often, lease provisions and governmental regulations usually require quick abandonment; liability and tax concerns also may favor abandonment. In theory an abandoned well can be reentered and restored to production (or converted to injection service for supplemental recovery or for downhole hydrocarbons storage), but reentry often proves to be difficult mechanically and not cost effective.

For example the first oil well in Iraq at Baba Gurgur field was abandoned and killed in 30 ,March ,2012 after 85 years of continuous production at a rate of (100000 bbl/day ) which is more than the reserves of many countries (these words were quoted from the former Iraqi oil minister Issam al-Jalabi )


## THE COMPANIES :

**Operating companies** are the financiers of the industry and are the principal users of the services provided by drilling contractors and service companies. An operating company, often called simply an operator, is a person or company who actually has the right to drill and produce petroleum that exist at a particular site. An operator can be a major company such as Exxon,

Shell, Gulf Texaco, Mobil, BP to name but a few. Operating companies, both large and small, have found it more expedients to utilize the men, equipment, and skills and experience of drilling contractors to perform the actual drilling of a well. The contract for making hole goes to s drilling contractor, but the operating company is usually the one that wards other contracts to the **service and supply companies.**

## LOCATION PREPARATION :

Briefly ,It must be detected the location coordinates ,soil profile ,area of the site and How many acres are in the drill site tract? Based on the projected depth of the well, estimate how many acres the location will cover? And there are additional information must be known:

1-estimation of the length of time: 30, 45, 60, or 90 days.
2- Will work be done in the rainy season?
3- Approximately how long will the drilling rig be on location?

### Well Depth vs. location Size

Although location size will depend entirely on the drilling rig and the Drilling Contractor's specifications, a general relationship between well depth and location size is:

| Well Depth | Cleared Area | # of Acres |
|---|---|---|
| 0' - 2,000' | 200' x 250' | 1.15 |
| 2,000' - 4,000' | 250' x 250' | 1.44 |
| 4,000' - 6,000' | 250' x 300' | 1.72 |
| 6,000' - 8,000' | 310' x 260' | 1.85 |
| 8,000' - 10,000' | 310' x 315' | 2.15 |
| 10,000' - 12,000' | 310' x 370' | 2.63 |
| 12,000' - 14,000' | 310' x 380' | 2.70 |
| 14,000' - 16,000' | 320' x 410' | 3.01 |
| 16,000' - 25,000' | 335' x 435' | 3.35 |

Install conductor pipe
Prepare support pad for rig, camp, etc
Build roads, fencing, dig pits
Sometimes drill water well.

## TYPES OF DRILLING CONTRACTS :

### 1-TURNKEY DRILLING CONTRACT:

A type of financing arrangement (contract) for the drilling of a wellbore that places considerable risk and potential reward on the drilling contractor. Under such an arrangement, the drilling contractor assumes full responsibility for the well to some predetermined milestone such as the

successful running of logs at the end of the well, the successful cementing of casing in the well or even the completion of the well. Until this milestone is reached, the operator owes nothing to the contractor. The contractor bears all risk of trouble in the well, and in extreme cases, may have to abandon the well entirely and start over. In return for assuming such risk, the price of the well is usually a little higher than the well would cost if relatively trouble free. Therefore, if the contractor succeeds in drilling a trouble-free well, the fee added as contingency becomes profit. Some operators, however, have been required by regulatory agencies to remedy problem wells, such as blowouts, if the turnkey contractor does not.

**2-FOOTAGE DRILLING CONTRACT:** In the context of Oil & Gas law, a footage drilling contract refers to a contract in which the drilling contractor is paid to drill to a specified formation or depth. The drilling contractor is paid a set amount per foot drilled, and is given broad control over how to do the work. Under this kind of contract, the risk of unexpected delays along with other liabilities is on the contractor and not on the lease operator.

**3- DAYWORK DRILLING CONTRACT:** In relation to Oil & Gas law, a daywork drilling contract is one in which the lease operator hires a drilling rig and oilfield workers and retains the right to direct drilling operations. The lease operator pays an amount based on the time spent in drilling operations. This type of contract gives the lease operator broad control over the drilling contractor. As a result, courts impose broad liability on the lease operator for any damages caused due to the drilling.

**4-COMBINATION DRILLING CONTRACT:** The basis for payment is often combined in the final agreement. An Operator may agree to pay Footage rate to a certain depth, then pay Daywork for any drilling done below that depth.

**ADVANTAGES & DISADVANTAGES**

**A-**Turnkey Contract:
-Advantage: There is no risk to the Operator.
-Disadvantage: 1. A lien can be placed on the well if the Drilling Contractor cannot pay the third-party charges.
2. The Operator is ultimately responsible to the Regulatory Authorities

.
B-Footage Contract:
-Advantage: The job is completed in less time.
-Disadvantage: The cost of time to solve most problems is charged against the Operator.

C-Daywork Contract:
-Advantage: The Operator has complete control.
.-Disadvantage: 1. The Operator has to have a representative on location at all times

2. The Operator assumes all of the risks of drilling the well.

# MECHANICAL HOLE MAKING METHODS:

## 1-CABLE TOOL METHOD:

Cable tool method has its beginnings 4000 years ago in China. it was the earliest drilling method and has been in continuous use for about 4000 years. The Chinese used tools constructed of bamboo and well depths of 3000 ft are recorded. However, wells of these depth often took generations to complete.

Cable tool rigs are sometimes called pounders, percussion, spudder or walking beam rigs. They operate repeatedly lifting and dropping a heavy string of drilling tools into the boreholes. The drill bits breaks or crushes consolidate rock into small fragments. When drilling in unconsolidated formations, the bit primarily loosens material.

Water, either from the formation or added by the driller, mixes the crushed or loosened into a slurry at the bottom of the borehole. An experienced cable tool driller feels when the accumulated slurry has reached the point where it is reducing bi penetration to an unacceptably slow level. At this point the slurry is removed from the borehole by a bailer. Once the slurry is removed, the bit is reinserted into the hole and drilling continues.



CABLE TOOL DRILLING BIT

CABLE TOOL DRILLING RIG COMPONENTS

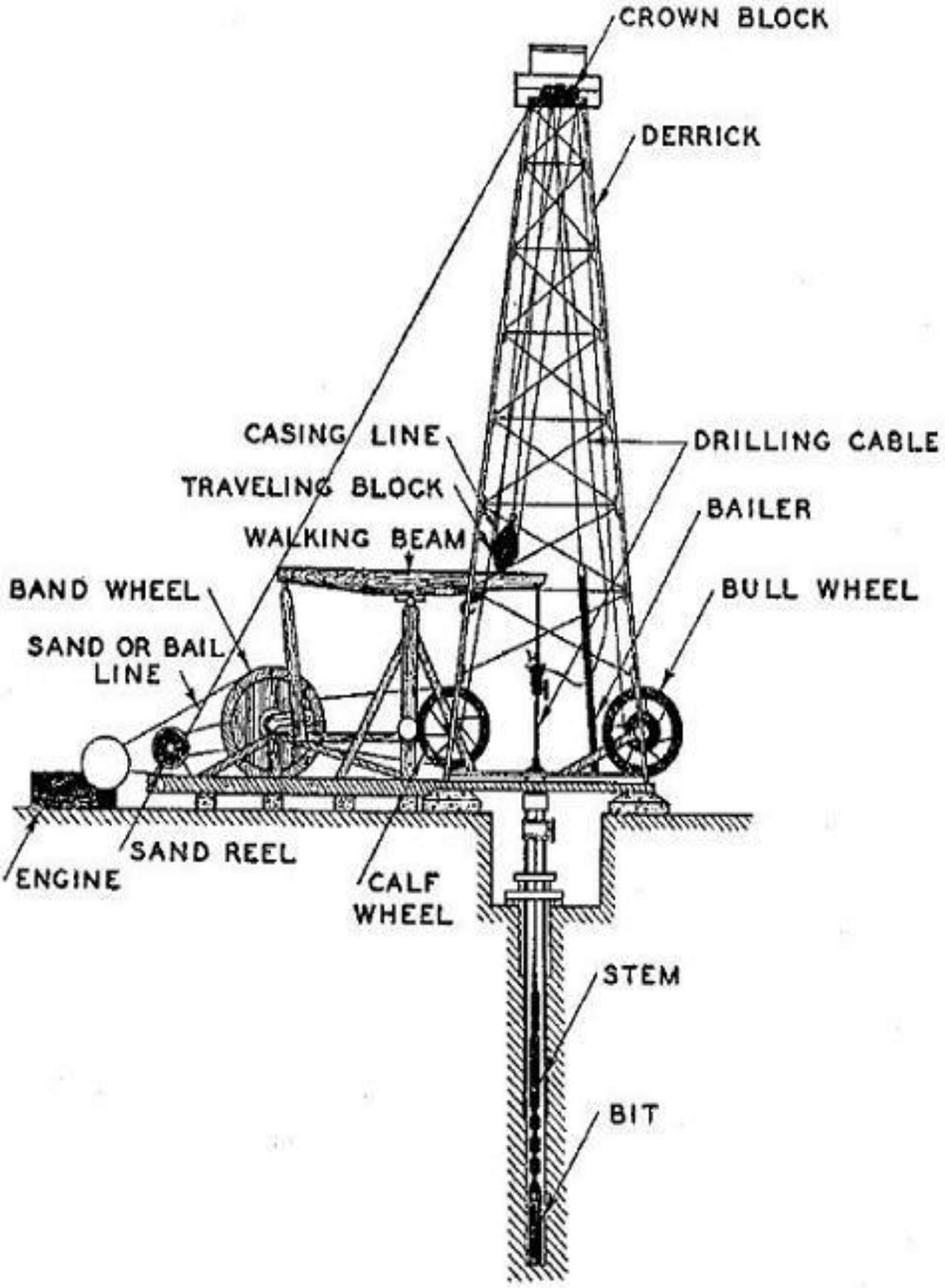

Often a cable-tool rig drills only one-tenth as fast as a rotary rig in comparable formations. However, the cost of a cable-tool rig is substantially less than a rotary rig. This tends to compensate for its slower drilling rate. A distinct disadvantage of the cable-tool method is that when high-pressure oil and gas formations are encountered, there is no fluid in the hole to control them. The result is frequent blowouts. When a blowout occurs, the oil and gas from the subsurface formation rush to the surface and flow uncontrolled. A blowout may spray
the oil and gas several hundred feet into the air, and there is always great danger of a fire. Because of its slow penetration rate and the hazard of blowouts, the cable-tool method is seldom used on wells deeper than (3000 ft or 900 meters). Even on shallower wells, this method has largely been replaced by the rotary method.

## 2- ROTARY DRILLING METHOD :

In Rotary drilling, a bit used to cut the formation is attached to steel pipe called drillpipe. The bit is lowered to the bottom of the hole. The pipe is rotated form the surface by means of a rotary table, through which is inserted a square or hexagonal piece called a kelly. The Kelly (in the top drive system the rotary table and Kelly are not exist), connected to the drillpipe at the surface, passes through the rotary table. The turning action oft the rotary table is applied to the Kelly, which is turn rotate, the drillpipe and the drilling bit. Routine drilling consists of continuously drilling increments the length of one joint of pipe, making connections or adding to the drillstring another single joint of pipe, generally 30 or 45 ft long. This drilling continues until the drill bit must be changed. Changing the bit is also called making a trip.

The idea of rotary drill bit is not new. Archaeological records show that as early as 3000 B.C., the Egyptians may have been using a similar technique. Leonardo Di Vinci, as early as 1500, developed a design for a rotary drilling mechanism that bears much resemblance to technology used today. Despite these precursors, rotary drilling did not rise in use or popularity until the early 1900's.
Although rotary drilling techniques had been patented as early as 1833, most of these early attempts at rotary drilling consisted of little more than a mule, attached to a drilling device, walking in a circle! It was the success of the effort of captain 'Anthony Lucas' and 'Patillo Higgins' in drilling their 1901 'Spindltop' well in Texas that catapulted rotary drilling to the forefront of petroleum drilling technology.
THIS DRILLING METHOD WILL BE DISCUSSED IN DETAIL LATER

## ROTARY RIG SELECTION :

Rotary rig selection for the drilling of a well is one of the first tasks undertaken in the well planning process. Much of the reminder of the well plan hinges on potential limitations imposed by selecting the personnel and equipment for drilling. When choosing the rotary rig, the planner has two things in mind: (1) ensuring adequacy of the rig and (2) minimum cost. Both factors can be combined into one: cost effectiveness.

**Depth limitations:** the depth limitation is one of the most important criteria to select a rotary drilling rig.

**TABLE 1-1** Criteria for determining depth limitation

- Derrick
- Drawworks
- Mud pumps
- Drillstring
- Mud system
- Blowout preventer
- Power plant

## ROTARY DRILLING RIGS TYPES:

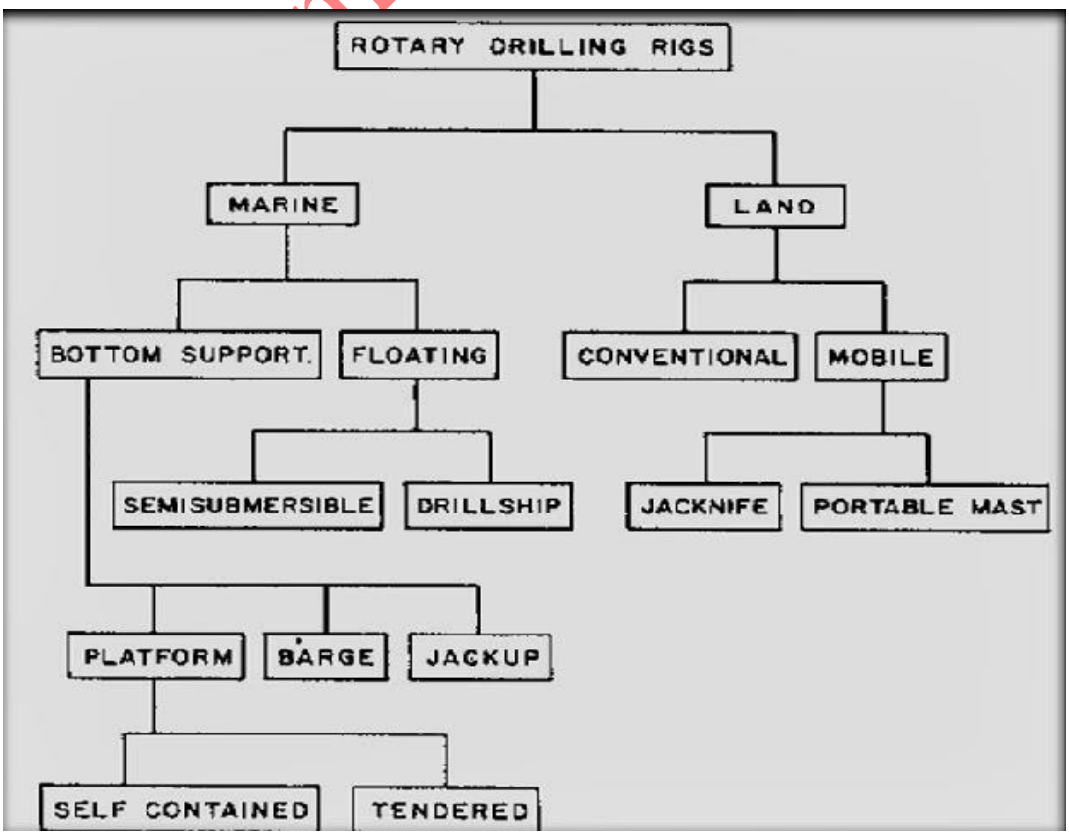

A ]drilling rig punches holes into the ground to suction out underground oil reserves to fuel the modern economy. Drilling rigs exist in many sizes, shapes and configurations, and perform a variety of similar oil-related tasks. Some drilling rigs are even used to extract underground water reserves. These installations can be small enough to fit onto the back of a light truck or as tall as apartment buildings. (we will talk about land rigs or onshore rigs).

As shown in the figure land rigs can be classified into two types which are (1)conventional. (2)mobile.

The derrick of the conventional land rigs must be built on location. In many cases the derrick is left over the hole after the well is completed. In the early days of drilling, many of these standard derricks were built quite close together as a field was developed.

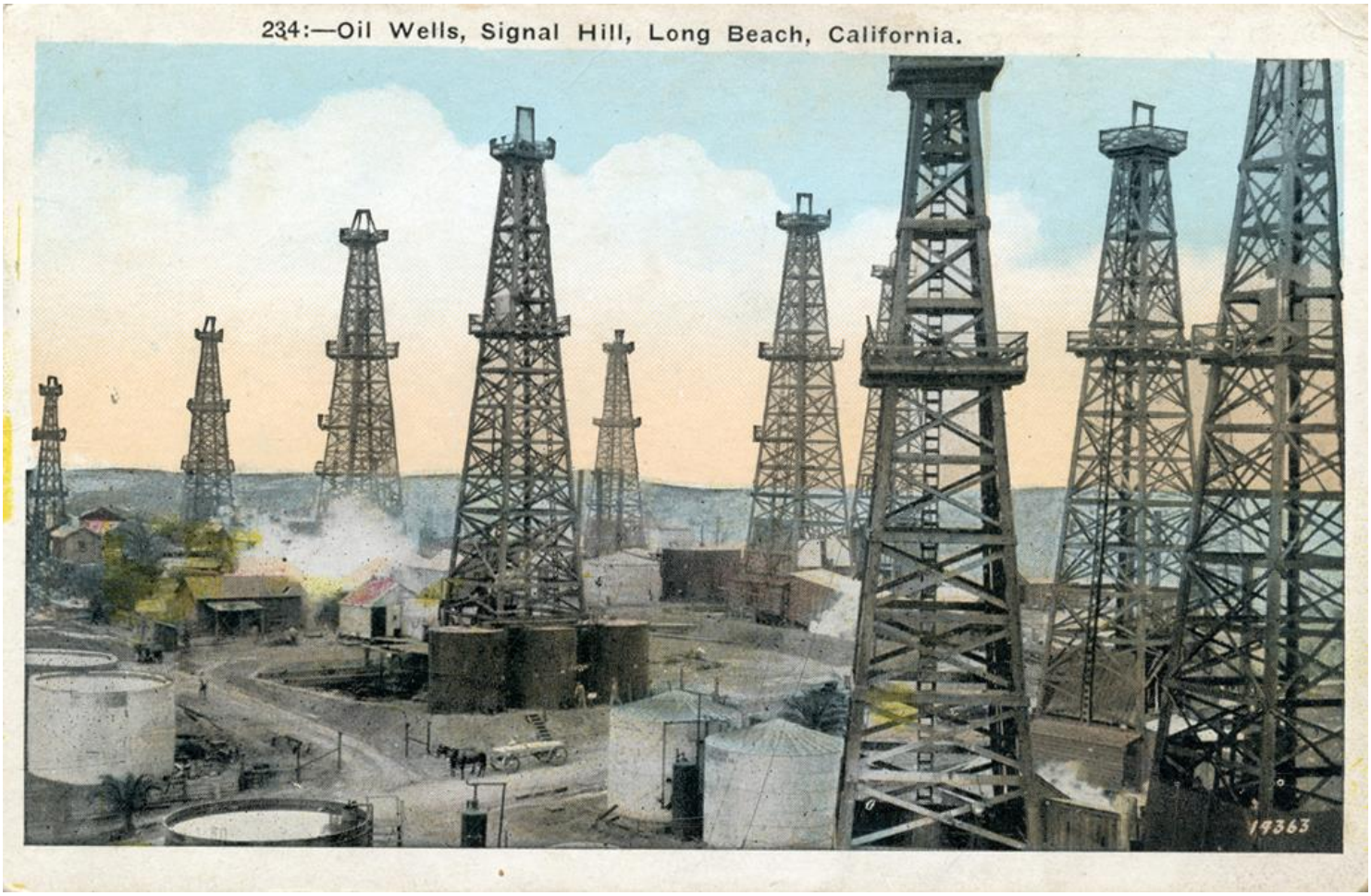


However, because of the high cost of construction, most modern land rigs are built so that the derrick be moved easily by heavy duty trailers, and reused. The various rig components are skid-mounted so that the rig can be moved in units and connected easily. The jackknife, or the cantilever, derrick is assembled on the ground with pins and then raised as a unit using the rig-hoisting equipment. The portable mast, which is suitable for moderate-depth wells, usually mounted on wheeled trucks or trailers that incorporate the hoisting machinery, engines, and derrick as a unit. The telescoped portable mast is raised to the vertical position and then extended to full height by hydraulic pistons on the unit.

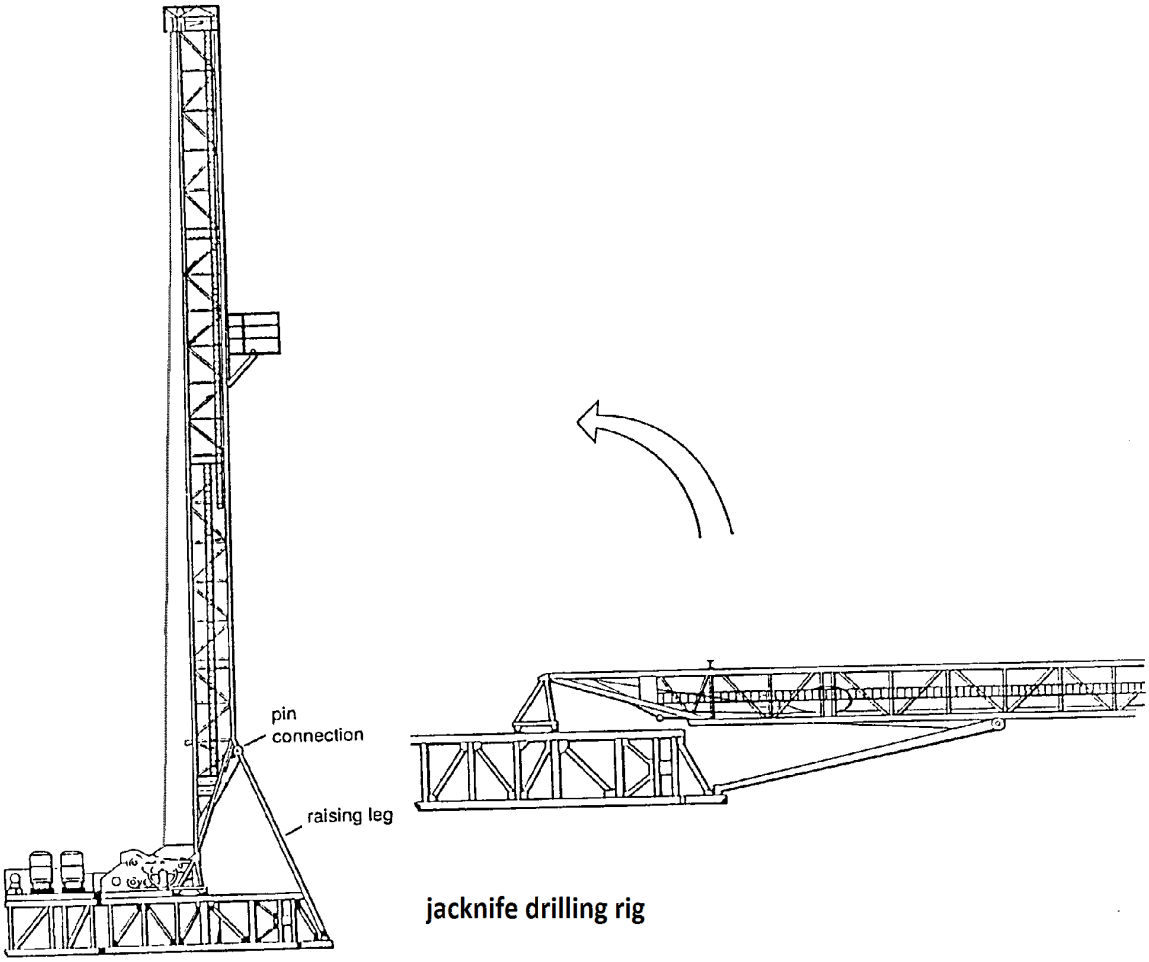


jacknife drilling rig


portable mast drilling rig


kenworth trailer used to rig moving



## ROTARY DRILLING RIG SIZES:

Land drilling rigs can be classified according to the drilling depth into different sizes:

**1-light duty rigs:** drill holes from about (3000-5000 ft) deep or (1000-1500 meters).
**2-medium duty rigs:** drill to depth ranging from (4000-10000 ft) or (1200-3000 meters).
**3-heavy duty rigs:** drill holes from about (12000-16000 ft) deep or (3500-5000 meters).
**4-ultraheavy duty rigs:** drill holes from about (18000-25000 ft) deep or (5500-7500).

## ROTARY DRILLING RIG COMPONENTS:

The main function of a rotary rig is to drill a hole, or as it is known in the industry, **to make hole**. Making hole with a rotary rig requires not only qualified personnel, but a lot of equipment as well. In order to learn about the components that it takes to make hole, it is convenient to divide them into a number of main systems: power, hoisting, rotating, circulating, well control, and well monitoring system. Various components comprise the systems, but all require power to make them work.

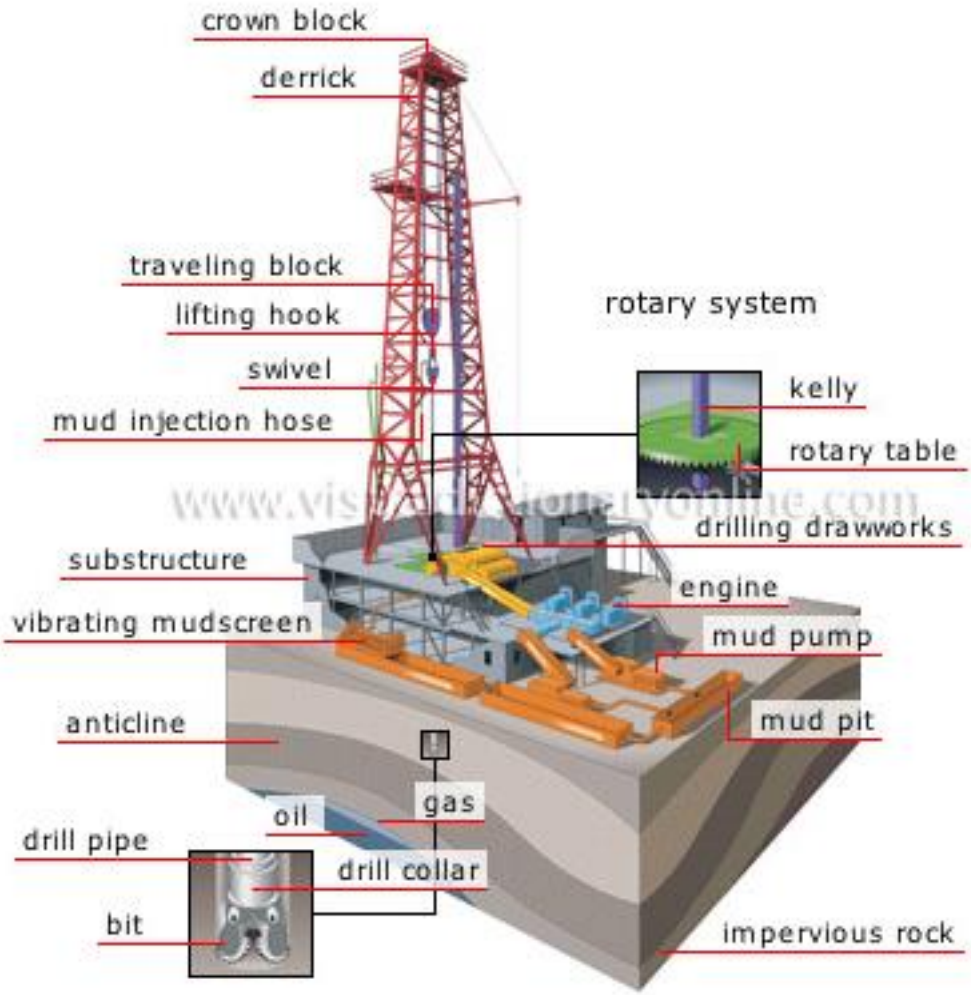


## 1-RIG POWER SYSTEM:

Most rig power is consumed by hoisting and fluid circulating systems. The other rig systems have much smaller power requirements. Fortunately, the hoisting and circulating systems generally are not used simultaneously, so that the same engines perform both functions.

Total power requirements for most rigs are from 1000 to 3000 hp provided by one or more engines depending on well depth and rig design. Power requirements vary for different drilling jobs, shallow or moderate depth drilling rigs need 500 - 1,000 HP, heavy-duty rigs for 20,000 foot (6000 meters) holes usually need 3,000 hp, Auxiliary power requirements for lighting, etc., may be 100 - 500 hp.

The early drilling rigs were powered primarily by steam. However, because of high fuel consumption and lack of portability of the large boiler plants required, steam-powered rigs have become impractical. Modern rigs are powered by internal-combustion diesel (or gas) engines .engines and sub-classified depending on the method used to transmit power to the various rig systems as:

1-Diesel electric type.
2-Direct drive type.

Diesel electric rigs are those in which the main rig engines are used to generate electricity. Electric power is transmitted easily to the various rig systems(the diesel engines generate and deliver electric power by cables to electrical then to electric motors attached to the involved equipments) switch gear then to , where the required work is accomplished through use of electric motors. Direct-current motors can be wired to give a wide range of speed-torque characteristics That are extremely well-suited for the hoisting and circulating operations. The rig components can be packaged as portable units that can be connected with plug-in electric cable connectors. There is considerable flexibility of equipment placement, allowing better space utilization and weight distribution. In addition, electric power allows the use of relatively simple and flexible control system. The driller can apply power smoothly to various rig components, thus minimizing shock and vibration problems.

Direct drive rigs accomplish power transmission from the internal-combustion engines using system of pulleys, gears, chains, belts, and clutches rather than generators and motors. The initial cost of a direct-drive power system generally is considerably less than that of a comparable diesel-electric power system. The development of hydraulic drive has improved greatly the performance of this type of power system. Hydraulic drives reduce shock and vibrational problems of the direct drive power system. Torque convertors, which are hydraulic drives designed so that the output torque increases rapidly with output load, are now used to extend the speed-torque characteristics of the internal-combustion engine over greater ranges that are better suited to drilling applications. The use of torque convertors also allows selection of engines based on running conditions rather than starting conditions. Power-system performance characteristics generally are stated in terms of output horsepower, torque and fuel consumption for various engine speeds.

**3000hp =2237099.615 watt equal to the power operates 22371 house lamps.**

The power on modern rigs is most commonly generated by diesel-electric power units. The power produced is AC current which is then converted to DC current by the use of SCR (Silicon Controlled Rectifier).

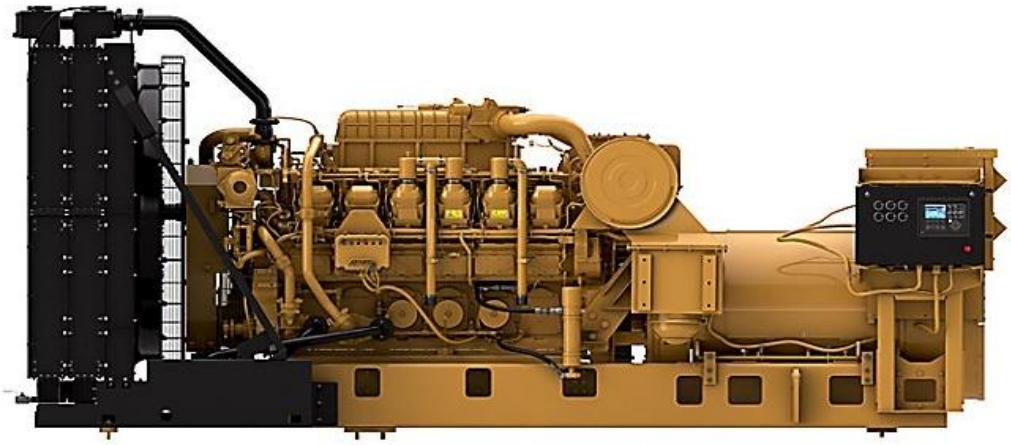

diesel electric power generator


## RIG LIGHTING:

Substructure rig light

**Mast rig light**

Mud tank rig light



## 2-HOISTING SYSTEM:

The function of the hoisting system is to provide a means of lowering or raising drill strings, casing strings, and other subsurface equipment into or out of the hole. The principal components of the hoisting system are

1-the derrick (mast).

2-substructure.

3-crown block.

4-travelling block.

5-hook.

6-drawworks.

7-drilling line.

Two routine drilling operation performed with the hoisting system are called (1)making a connection.(2)making a trip. Where making a connection refers to the periodic process of adding a new joint of drillpipe as the hole deepens. While making a trip refers to the process of removing the drillstring from the hole to change a portion of the downhole assembly and then lowering the drillstring back to the hole. A trip is usually made to change a dull bit.

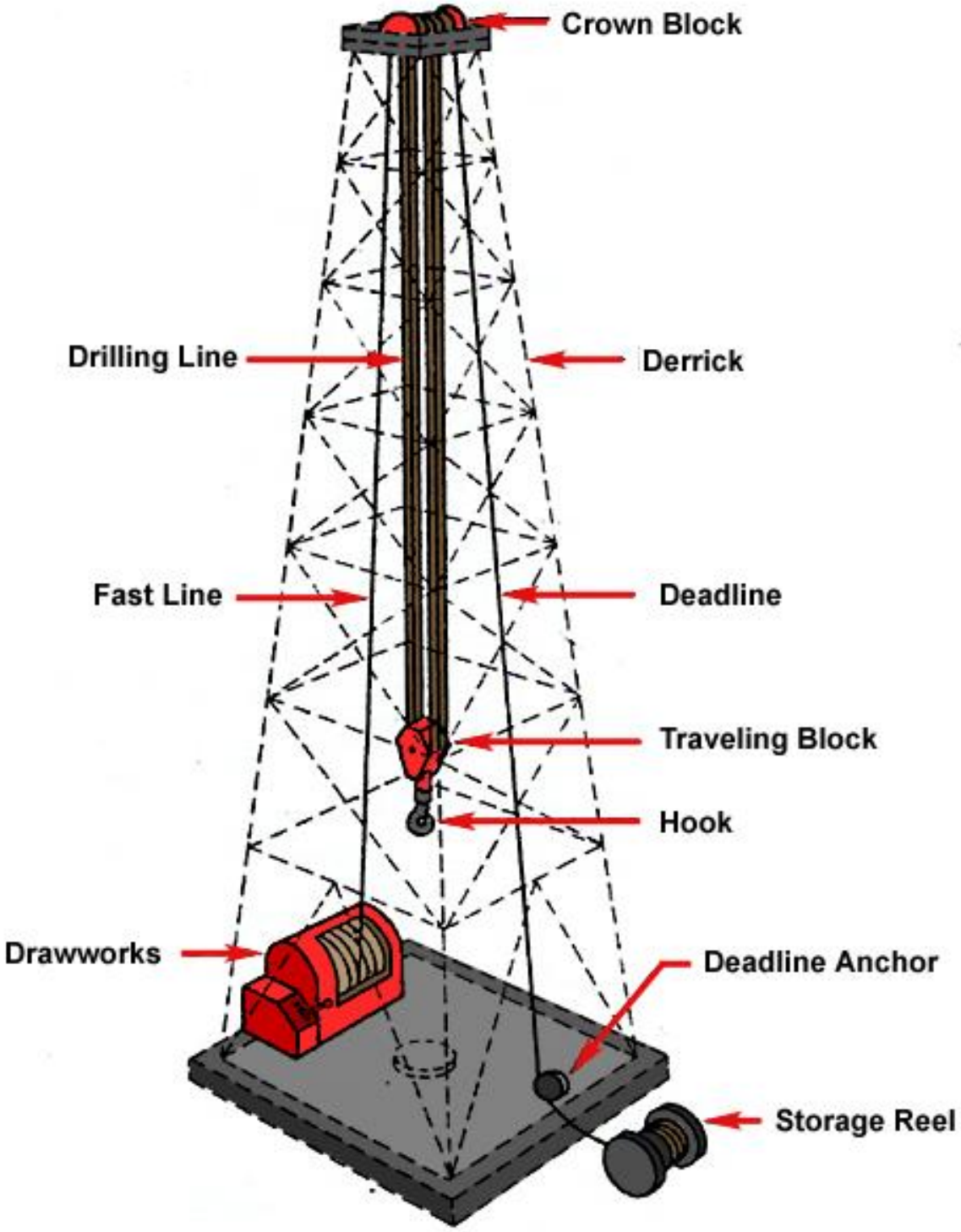

## 1-the derrick (mast):

The function of the derrick is to provide the vertical height required to raise sections of pipe from or lower them into the hole. The greater the height, the longer the section of the pipe that can be handled ,thus the greater height means faster along string of pipe can be removed from or inserted in the hole.the most commonly used drillpip is approximately 30 ft long. Derrick can handle sections called "stands", which are composed of two, three, or four joints of drillpipe, are said to be capable of pulling doubles, thribbles, or fourbles respectively.

In addition to their height, derricks are rated according to their ability to withstand compressive loads and wind loads. Allowable wind loads usually are specified both with the drillstring in the hole and with the drillstring standing in sections in the derrick. when the drillstring standing in the derrick resting against the pipe-racking platform, an overturning moment is applied to the derrick at that point. Wind rating must be computed assuming wind loading is in the same direction as this overturning moment. Anchored guy wires (***Guy line:*** A wire rope with one end attached to the derrick or mast assembly and the other end attached to a suitable anchor. attached to each leg of the derrick are used to increase the wind rating of small portable masts.

As a conclusion we can rate derricks according to vertical load they carry. And by the wind loads they can withstand from the side, most can stand a wind load of (100-130 mph) or (160.9-209.2 kph) with racks full of pipe.

the derrick also contain a board called "monkey board" at which the skillful person called "derrickman" stands on the monkey board and From this position he guides the stands of drill pipe, typically 90 feet (27 meters) long, into the fingers at the top of the derrick while tripping (removing the drill string) out of the hole. When tripping into the hole (or Running In) he will pull the pipe out of the fingers and guide it into the elevators From this position he guides the stands of drill pipe, typically 90 feet (27 meters) long, into the fingers at the top of the derrick while tripping (removing the drill string) out of the hole. When tripping into the hole (or Running In) he will pull the pipe out of the fingers and guide it into the elevators.

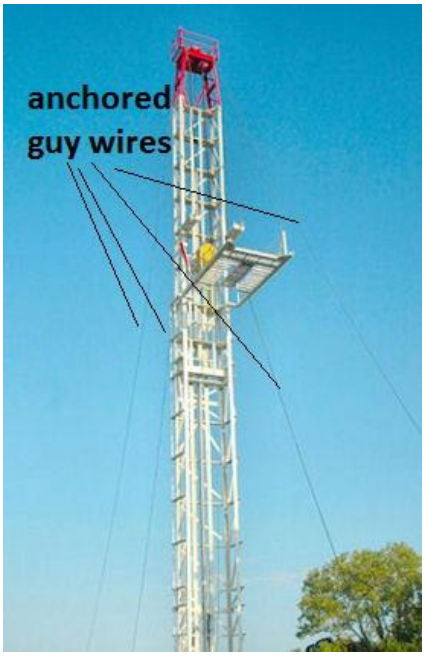
anchored
guy wires


derrickman



## 2- THE SUBSTRUCTURE:

To provide working space below the derrick floor for pressure control valves called blowout preventers (BOPs) the derrick usually elevated above the ground level by placement on a substructure, then the substructure is the foundation on which the derrick or mast and usually the drawworks sit; contains space for well control equipment.which means the substructure must support the derrick and other large pieces of equipments.

API recommends rating substructure load-supporting capacity according to (1) the maximum pipe weight that can be set back in the derrick, (2) the maximum pipe weight that can be suspended in the rotary table (irrespective of setback load), (3) the corner loading capacity (the maximum supportable load at each corner). Also in API standard 4A (American Petroleum Institute Drilling and Well Servicing Structures, API Spec 4F, First Edition, May, 1985).
,three substructure types have been adopted.

1-box-on-box substructure. 2-slingshot substructure. 3-swing-lift substructure.

In addition many non-API designs are available. the choice of design is usually governed by (1)blowout preventer height. (2) local soil conditions.


slingshot substructure


box-on-box substructure


Slingshot and s wing-lift are self- elevating substructures. Slingshot is one of the most popular substructures in the industry.

## 3-CROWN BLOCK:

A crown block is a device situated at the top of an oil rig or derrick. It sits on the crown platform, which is a steel platform located along the upper portion of the rig. The crown block works in conjunction with a similar component, the traveling block, which is positioned just below the crown platform. Together, these two systems are known as the block and tackle. While the block and tackle system appears relatively simple to outsiders, it actually represents a critical component of the oil drilling process.

Each crown block consists of a series of pulleys and steel cables, or sheaves. These cables and pulleys sit on a steel frame, which may be built into the structure of the derrick. The sheaves serve as drilling lines, and pass through the traveling block below to connect to the rig's hoisting drum. As the cables pass over the pulleys in one direction, they cause the oil drum to descend into the ground. When the cables pass over the pulleys in the other direction, they cause the oil drum to rise back up, bringing oil up for collection. The crown block can bear a weight from 240 up to 1400 ton.

The crown block increases in one sheave than the travelling block which is used for the fast line that goes to the drawworks and called fast sheave used only for the fast line.

## 4-TRAVELLING BLOCK:

The set of sheaves that move up and down in the derrick. The wire rope threaded through them is threaded (or "reeved") back to the stationary crown blocks located on the top of the derrick. This pulley system gives great mechanical advantage to the action of the wire rope drilling line, enabling heavy loads (drillstring, casing and liners) to be lifted out of or lowered into the wellbore. A traveling block is a multi-sheave pulley used to raise or lower the drill string and casings into a well bore. The blocks typically consist of four to six individual sheaves over which the steel cables used to suspend the traveling black are passed. The cables are then attached to the fixed crown block at the top of the derrick, leaving the lower block free to move up and down the cable fall. A shock absorber and crane hook are attached to the bottom of the traveling block and are used to suspend the drill string. These block assemblies are most frequently encountered in the oil drilling applications and are often capable of handling loads in excess of 1,000,000 pounds (454,000 kg).
Lowering, lifting, and controlling the drill string in deep well bores generally requires an extraordinarily robust hoist arrangement. These hoists usually consist of a crown block mounted in a fixed position at the top of the well derrick and a traveling block at the bottom of the fall of rope. The travelling block sheaves are flat disks with a deep groove machined around their circumference. When grouped together, as they are in the traveling block, they are collectively referred to as a pulley.

**Sheave Grooves.** On all sheaves, the arc of the groove bottom should be smooth and concentric with the bore or shaft of the sheave. The centerline of the groove should be in a plane perpendicular to the **axis** of the bore or shaft **of** the sheave.

Sheaves should be replaced or reworked when the groove radius decreases below the values in standards. The use sheave gages as shown in Figure below shows **a** sheave with a minimum groove radius, and shows a sheave with a tight groove.

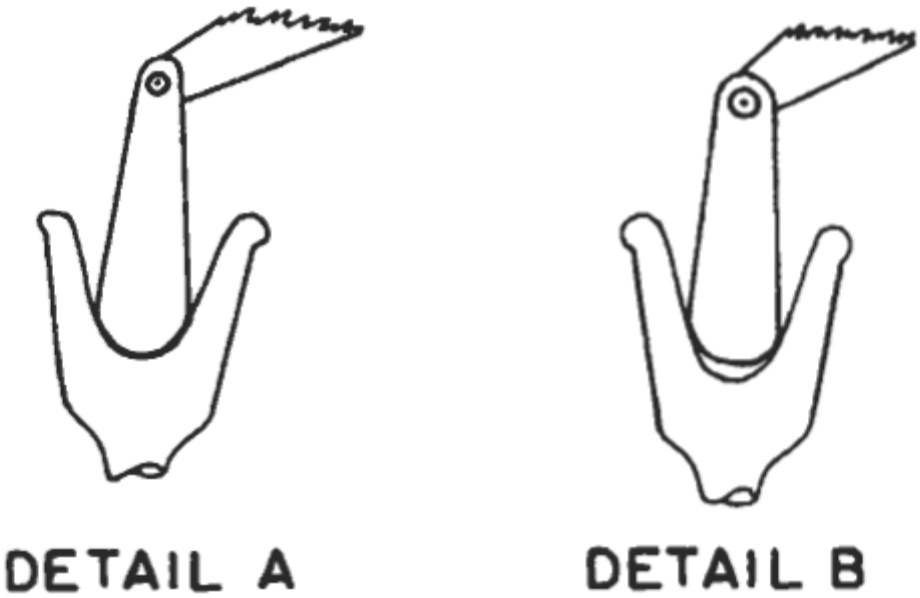


**Figure 4-77.** Use of sheave gage [11].

## 5-HOOK:

The high-capacity J-shaped equipment used to hang various other equipment, particularly the swivel and kelly, the elevator bails or topdrive units. The hook is attached to the bottom of the traveling block and provides a way to pick up heavy loads with the traveling block. The hook is either locked (the normal condition) or free to rotate, so that it may be mated or decoupled with items positioned around the rig floor, not limited to a single direction.In the hook block there is an Internal hydraulic snubber (shock absorber) to reduce impact on tool joints

There are two types of travelling block and hook

1-hook combined with the travelling block as one part called (hook-block combination), this type is shorter and allow to move long distance especially when the derrick height is limited. This type used in the workover and completion rigs, its weight is (175-650 ton).

2-hook and travelling block are separated, this type is dominant in oil rigs. Where the clevis (of the travelling block) is attached with the bail (of the hook), its weight is (100-1250 ton).



## 6-DRAWWORKS:

The drawworks provide the hoisting and braking power required to raise or lower the heavy strings of pipe. The horsepower of the drawworks is(550- 4000 HP ), consequently the rig's horsepower depends on the drawworks power. The principal parts of the drawworks are (1)the drum,(2) the brakes, (3)the transmission, and(4) the catheads. The drum transmits the torque required for hoisting or breaking. It also stores the drilling line required to move the travelling block the length of the derrick. The main brakes must have the capacity to stop and sustain the great weights imposed when lowering a string into the hole, the main brake, usually operated manually by a long handle, may be friction band brake, a disc brake or a modified clutch. It serves as a parking brake when no motion is desired.

Auxiliary brakes are connected to the drum, used to help dissipate the large amount of heat generated during the braking. Two types of auxiliary brakes commonly used are (1) the hydrodynamic type and (2)electromagnetic type,for the hydrodynamic type, braking is provided by water being impelled in a direction opposite to the rotation of the drum by water turbine. In the electromagnetic type, electrical braking is provided by two opposing magnetic fields. The magnitude is dependent on the speed of the rotation and the amount of the external excitation current supplied. In both types, the heat developed must dissipated by liquid cooling system.

The drawworks transmission provides a means for easily changing the direction an speed of the travelling block. Power also must be transmitted to catheads attached to both ends of the

drawworks. Friction catheads turn continuously and can be used to assist in lifting or moving equipments on the rig floor. The number of turns of rope on the drum and the tension provided by the operator controls the force of the pull. A second type of catheads generally located between friction catheads and drawworks housing can be used to provide the torque needed to screw or unscrew sections of pipe.

The drawworks often has a pulley drive arrangement on the front side to provide turning power to the rotary table, although on many rigs the rotary table is independently powered.

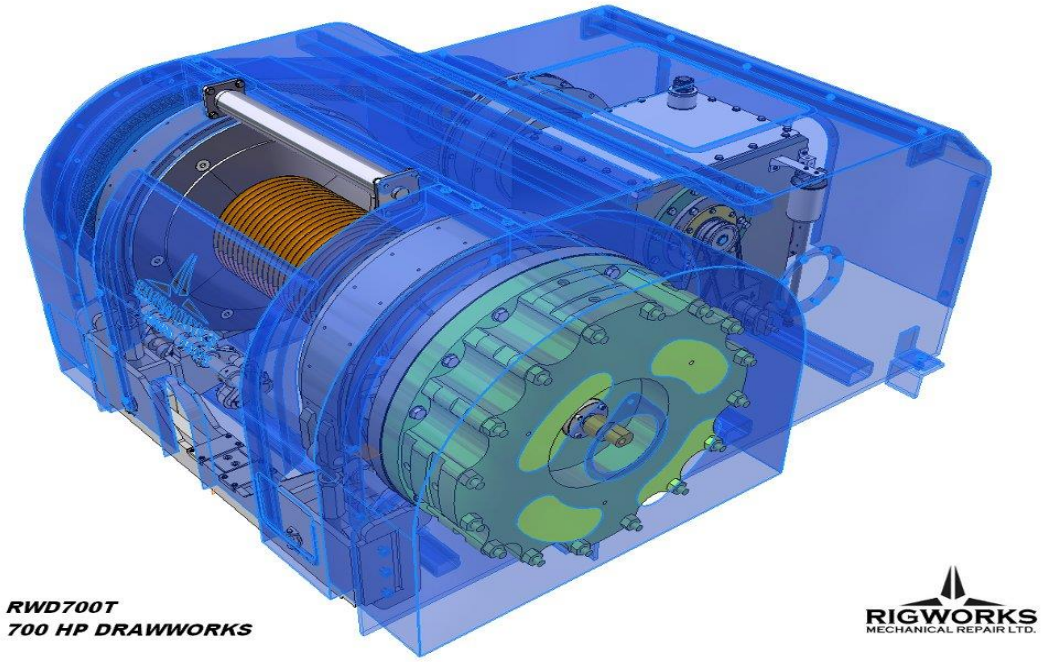


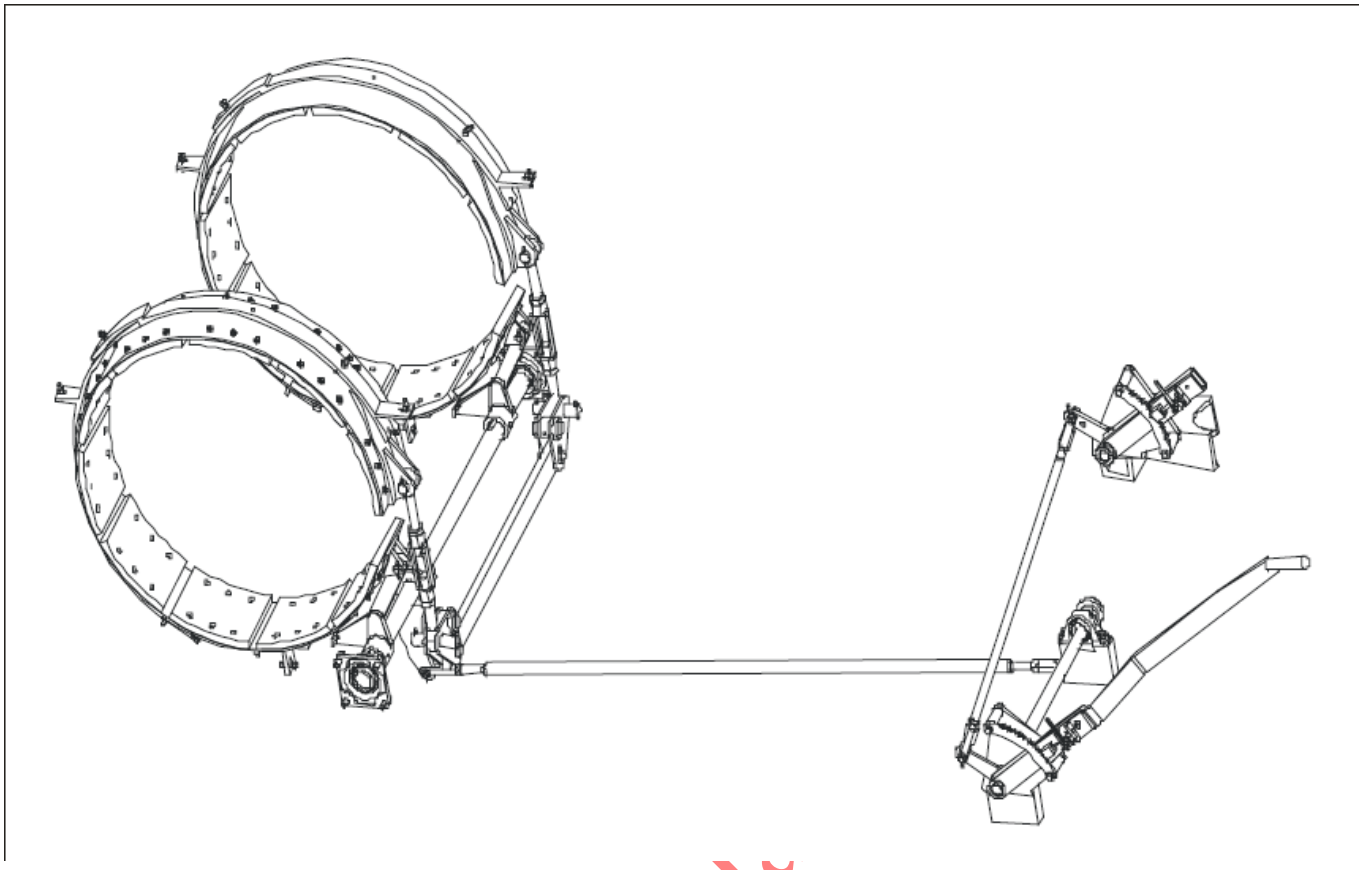

## 7-DRILLING LINE:

The drilling or hoisting line is made of braided steel wire about 3cm in diameter. The line consists of several strands of braided steel wire wound around a fiber or steel core.

The hoisting line is described by:

1- the type of core.

2- number of strands around the core.

3-the individual wires per strand. There are several ways to wrap the strands that are wound around the core.

The rounded strand ropes are the most common type of wire ropes, consists of six strands around a fibre core sometimes a small wire core. The drilling line ranges in size from 1 3/8 (3.5 cm) to 1 1/2 (3.8 cm) inches in diameter sometimes 2in.(5 cm) in diameter.

The drilling line begins from the storage reel towards the dead line anchor then goes up towards the crown block then down to the travelling block then goes up to the fast sheave, finally goes towards the drawworks' drum.

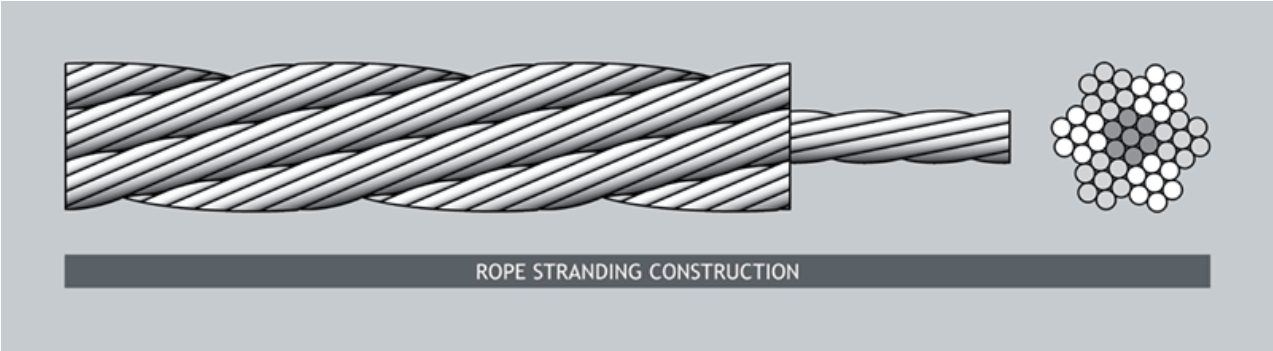


**DEAD LINE:** the drilling line from the crown block sheave to the anchor, so called because it does not move through a pulley or other mechanical device Compare fast line.

**DEADLINE TIE-DOWN ANCHOR**: A device to which the deadline is attached, securely fastened to the mast or derrick substructure. Also called a deadline anchor.

**DEADLINE SHEAVE**:. the sheave on the crown block over which the deadline is reeved.

**FAST LINE:** the end of the drilling line that is affixed to the drum or reel of the drawworks, so called because it travels with greater velocity than any other portion of the line. Compare deadline.

**STORAGE REEL:** it is the reel that contains the unused drilling line.

**CATLINE BOOM AND HOIST LINE**: a hoisting or pulling line powered by the cathead and used to lift heavy equipment on the rig. A structural framework erected near the top of the derrick for lifting material.

## 3-CIRCULATING SYSTEM:

A major function of fluid-circulating system is to remove the rock cuttings from the hole as the drilling progresses. Drilling fluid is most commonly a suspension of clay and other materials in water called drilling mud **(will be discussed in details)**. The drilling mud travels (1) from the steel tanks to the mud pump, (2) from the pump to the high-pressure surface connections to the drillstring, (3)through the drillstring to the bit, (4) through the nozzles of the bit and up the annular space between the drillstring and hole to the surface and (5) through the contaminant-removal equipment back to the suction tank.The principal components of the rig circulating system include:

1-mud pumps. 2-mud pits.

3-mud mixing equipment. 4-contaminat-removal equipment.

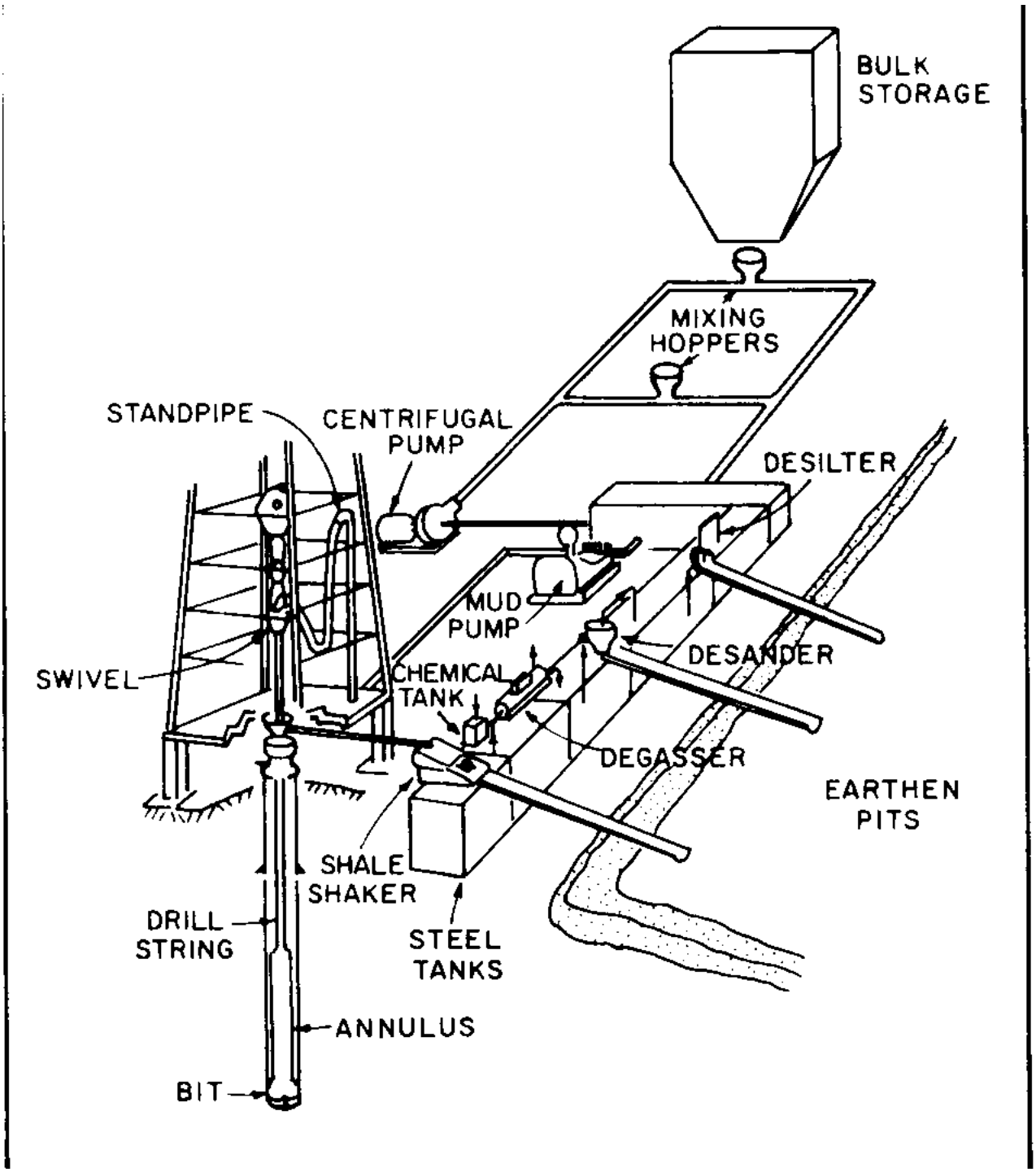


Schematic of example rig circulating system for liquid drilling rig

## 1-MUD PUMPS:

Mud pumps always have used reciprocating positive-displacement piston. Both two-cylinder (duplex) and three cylinder (triplex) pumps are common. The duplex pump are generally double-acting pumps that pump on both forward and backward piston strokes. The triplex pumps are generally single-acting pumps that pump only on forward piston strokes.

Triplex pumps are lighter and more compact than duplex pumps, their output pressure pulsations are not as great, and they are cheaper to operate. For this reasons, the majority of new pumps being placed into operation are of the triplex design.

Schematic of triplex piston pump (single –acting piston)

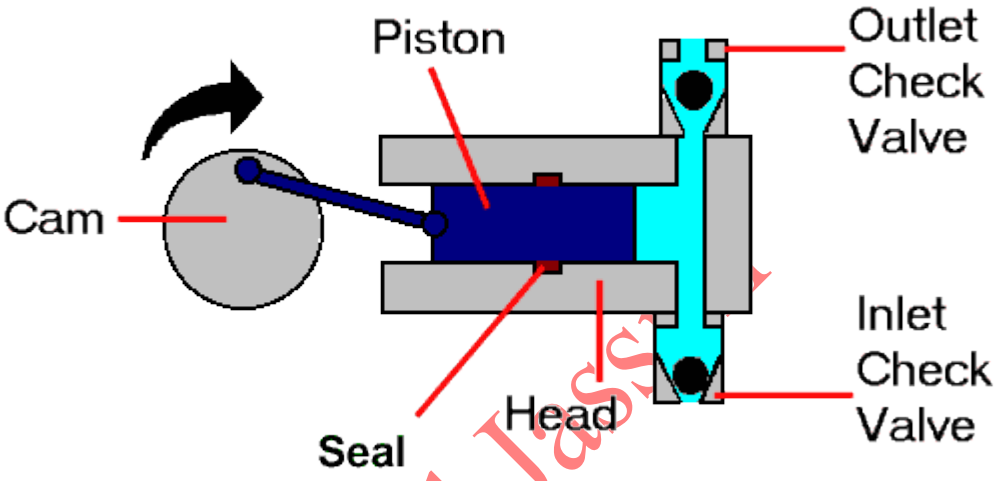


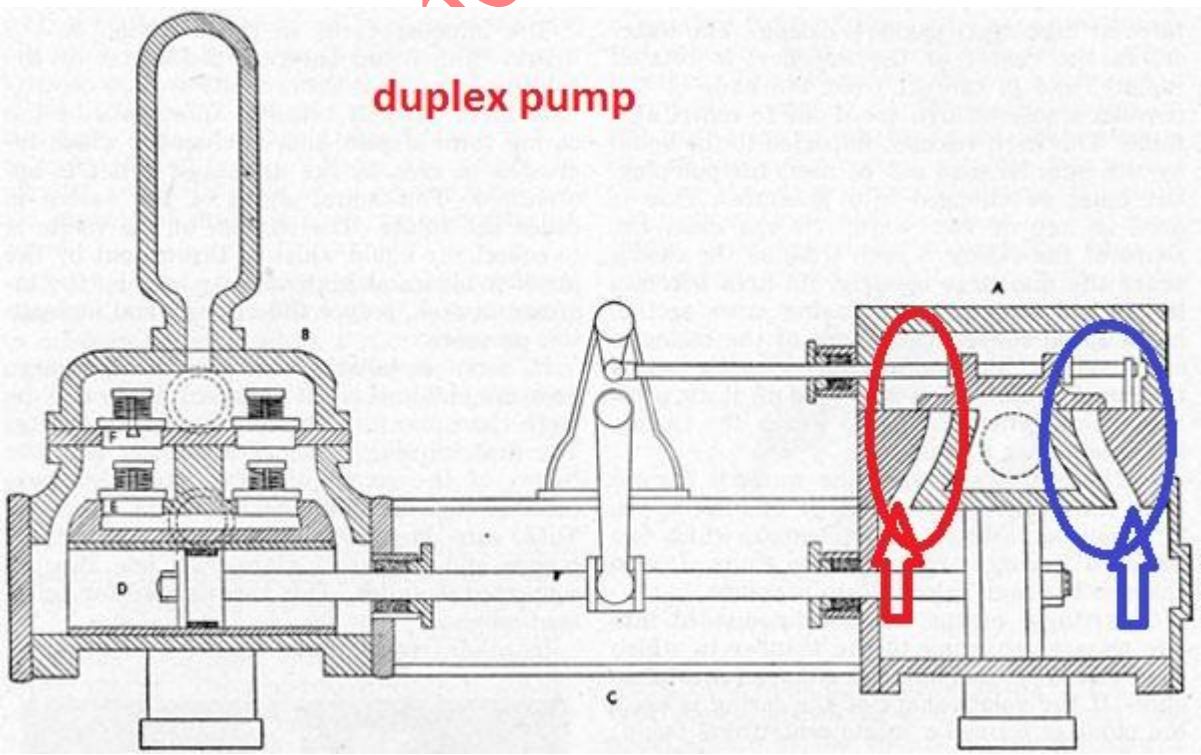


The advantages of the reciprocating positive-displacement pump are:
1-ability to move high-solids-content fluids laden with abrasives (heavy duty pumps).

2-ability to pump large particles.
3-ease of operation and maintenance.
4-reliability.
5-ability to operate over a wide range of pressure and flow rates by changing the diameters of the pump liners (compression cylinders) and pistons.
6-long operating hours.
7- capable to deal with wide range of mud (density (1-2), viscosity (1-100 cP), particles (LCM-up to 10%).
Generally two circulating pumps are installed on the rig. For the larger hole sizes used on the shallow portion of most wells, both pumps can be operated in parallel to deliver the large flow rates required. On the deeper portions of the well, only one pump is needed, and the second pump serves as a standby for use when pump maintenance is required.

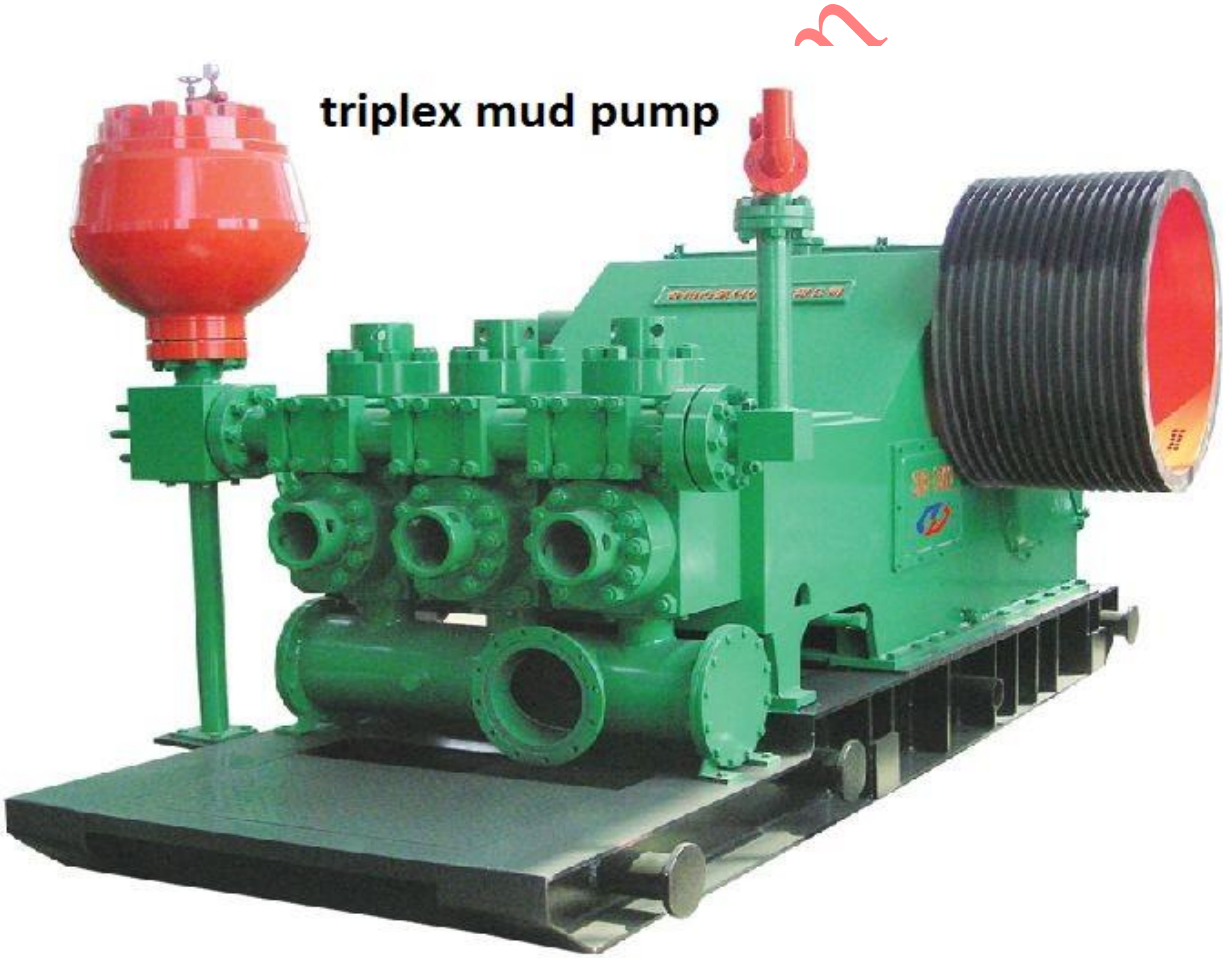


The flow conduits connecting th mud pumps to the drillstring include, (1) a surge chamber, (2) 4- or 6-inches heavy-walled pipe connecting the pump to a pump manifold located on the rig floor, (3) a standpipe and a rotary hose, (4) a swivel and, (5) a Kelly. The surge chamber contains a gas in the upper portion, which is separated from the drilling fluid by a flexible diaphragm. The surge chamber greatly dampens the pressure surge developed by the positive-displacement pump. The discharge line also contains a pressure relief valve to prevent line


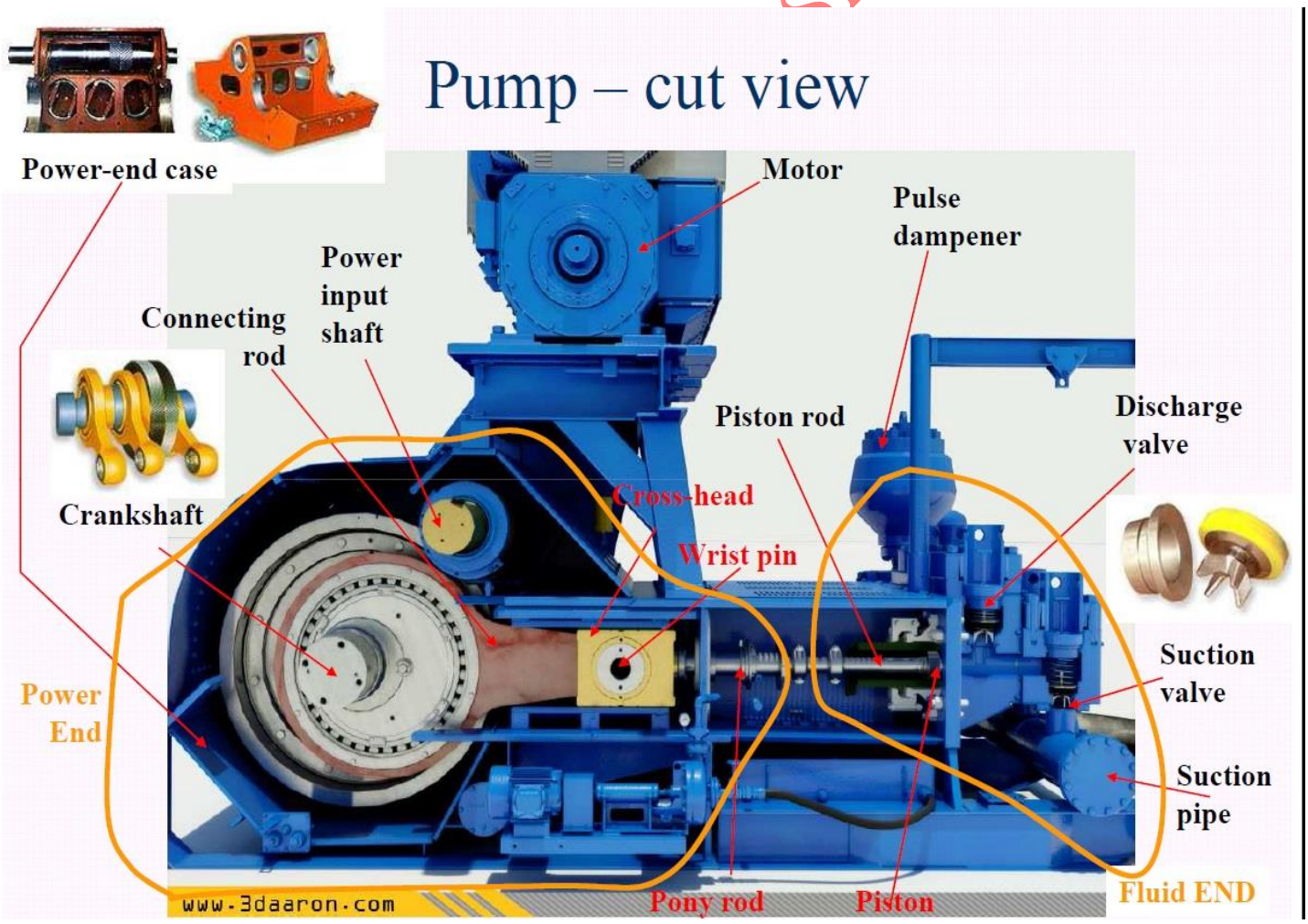


rapture in case the pump is started against a closed valve. The standpipe and rotary hose provides flexible connection that permit vertical movement of the drillstring. The swivel contains roller bearing to support the rotating load of the drillstring and rotating pressure seal

that allows fluid circulation through the swivel. The Kelly, whick is a pipe rectangular or hexagonal in cross section, allows drillstring to be rotated.

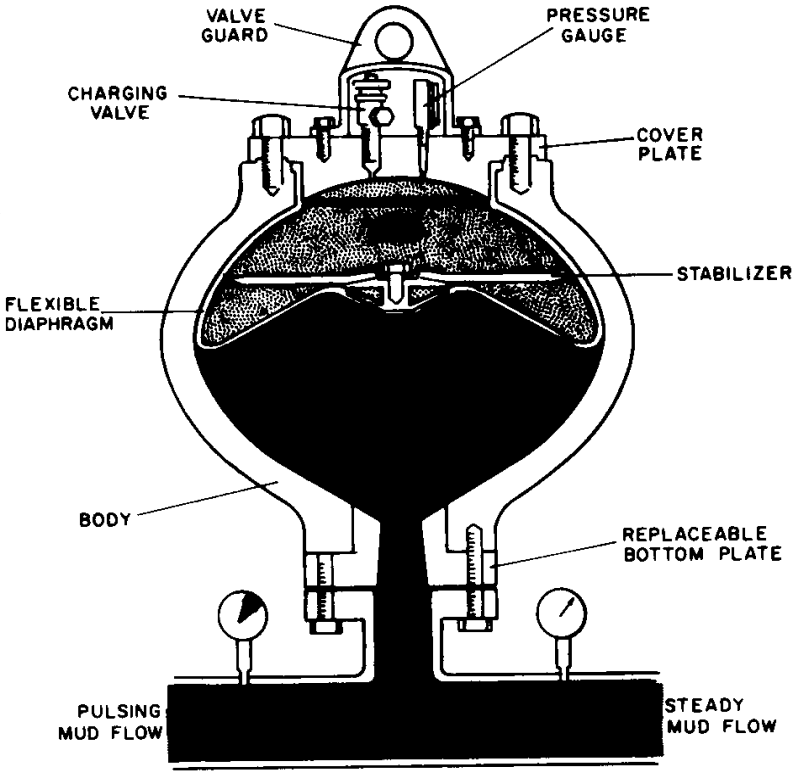


**Fig. 1.26** – Example pulsation dampener.



## 2-MUD PITS:

Mud pits are required for holding an excess volume of drilling mud at the surface. This surface volume allows time for settling of the finer rock cuttings and for release of entrained gas bubbles not mechanically separated. Also, in case some drilling fluid is lost to underground formations, this fluid loss is replaced by mud from the surface pits. The settling and suction pits sometimes are dug in the earth with a bulldozer but more commonly are made of steel. Mud pit compartments are also called shaker pits, settling pits, and suction pits, depending on their main purpose.. A large earthen reserve pit is provided for contaminated or discarded drilling fluid and for rock cuttings. This pit also used to contain any formation fluids produced during drilling and well testing operations. mud pit usually lined with a single-ply 20 or 30 milmeter polyethylene liners that resist punctures and wind damage to prevent any contamination.


Dry mud additives often are stored in sacks, which are added manually to the suction pit using mud mixing hoppers. However, on many modern rigs bulk storage is used and mud mixing is largely automated. Liquid additives can be added to the suction pit from chemical tank. Mud jets or motor-driven agitators often are mounted on the pit for auxiliary mixing.

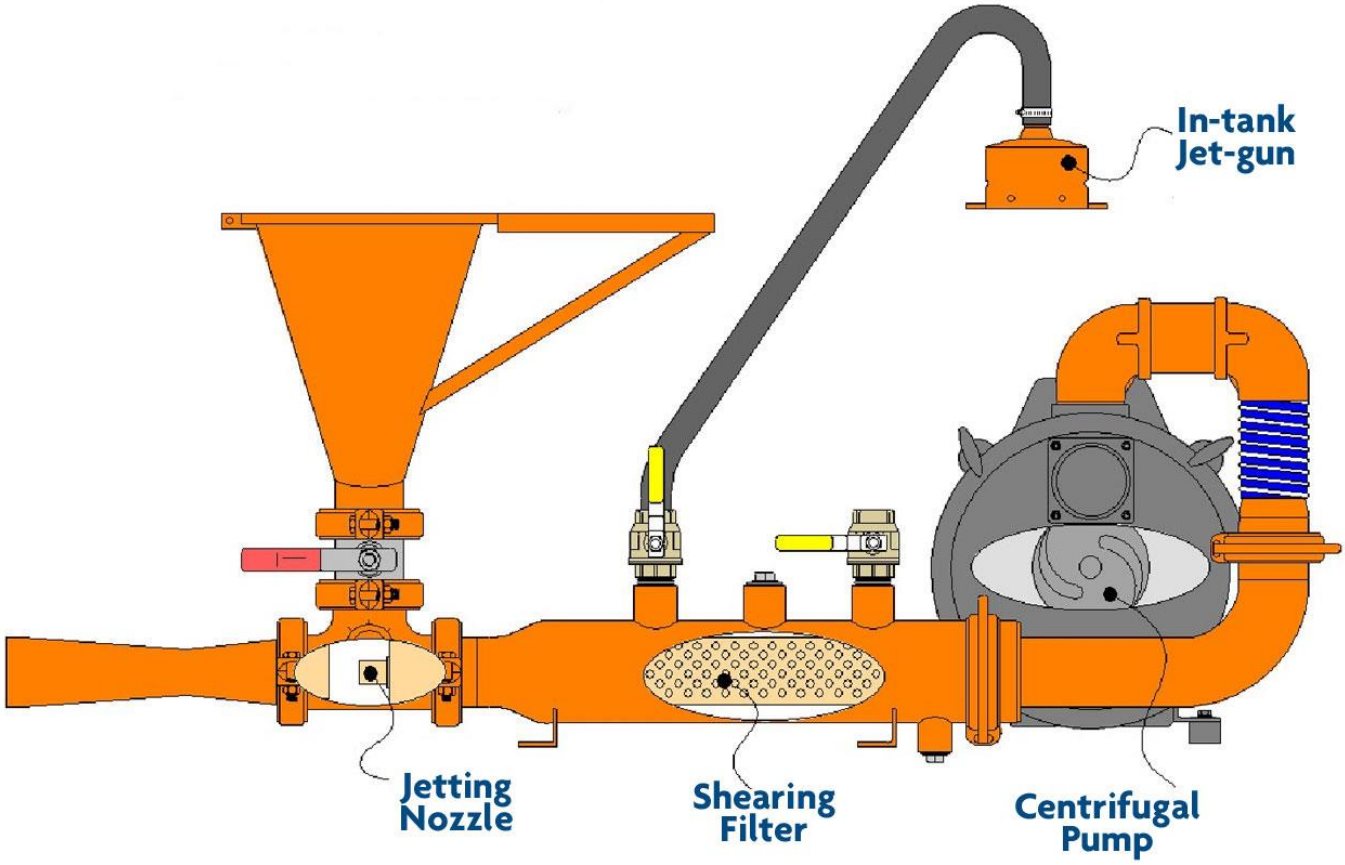


## 3-THE CONTAMINAT-REMOVING EQUIPMENT:

This equipment includes mechanical devices for removing solids and gases from mud. The coarse rock cuttings and cavings are removed by the shale shakers, the shale shaker is composed of one or more vibrating screens over which mud passes as it returns from the hole. The risk in shale shakers is that gas may be present in vicinity of shale shaker leading to a a probable explosion or toxicity.



Multiple shakers may be used:

-In parallel for high flow rate.

-In series for multiple filtering range.

The description of shale shaker is shown in figure below.

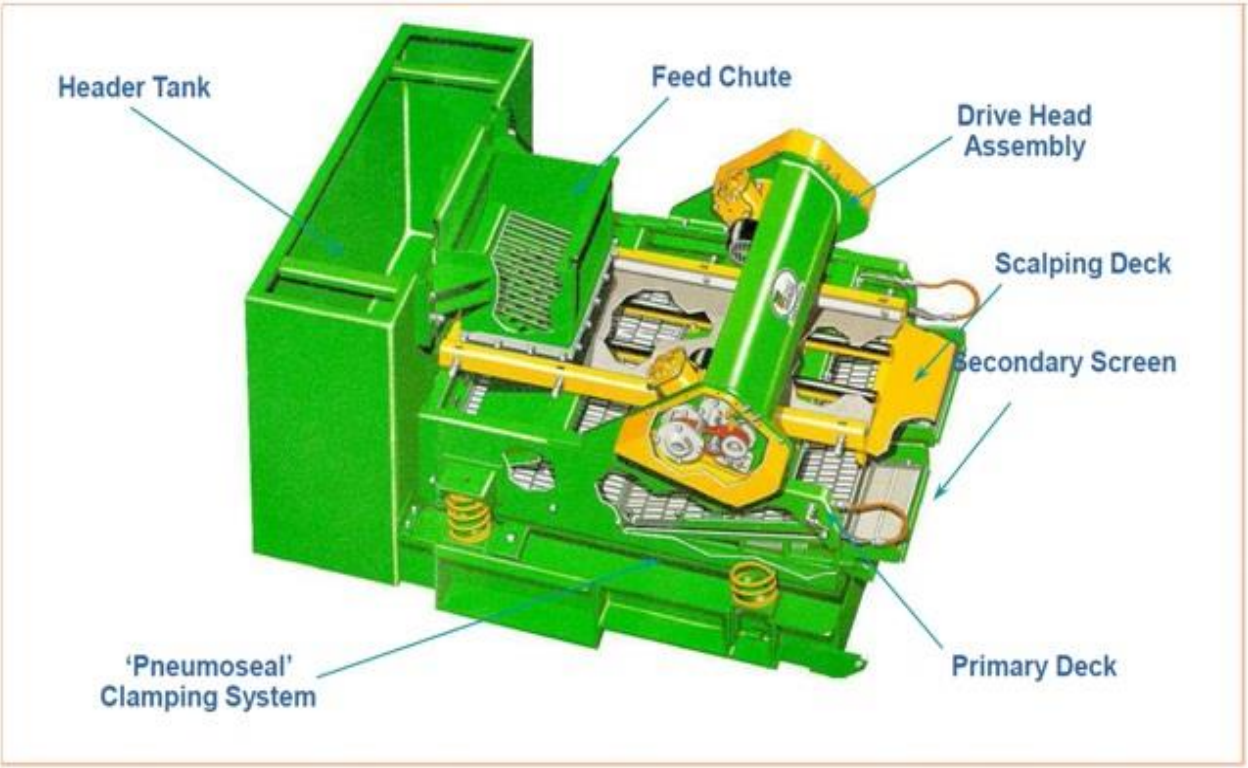


When the amount of finely ground solids becomes too great, they can be removed by hydrocyclone and decanting centrifuges also called (desander). A hydrocyclone is a cone-shaped housing that imparts a whirling fluid motion much like a tornado. The heavier solids in the mud are thrown to the housing of the hydrocyclone and fall through the apex at the bottom. Most of the liquis and lighter particles exit through the vortex finder at the top.

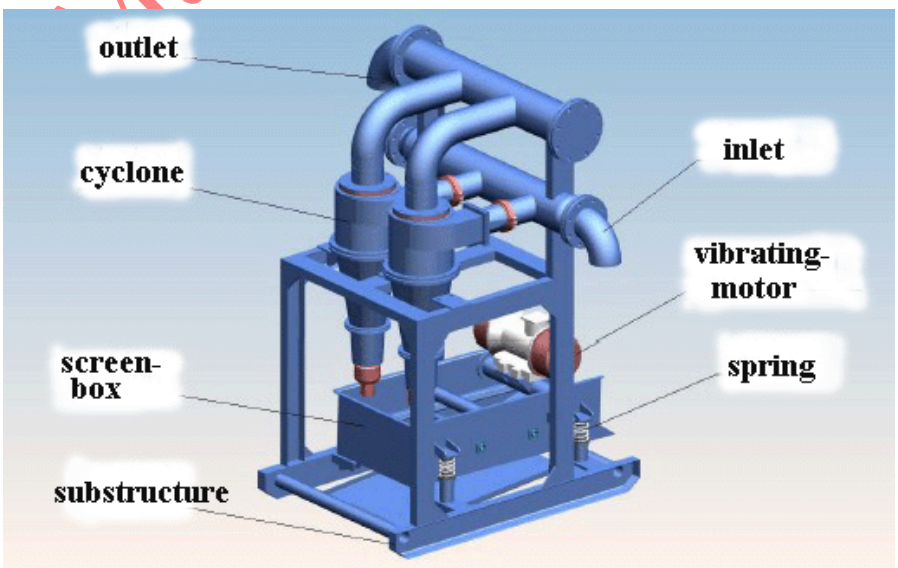


**Structure of desander**

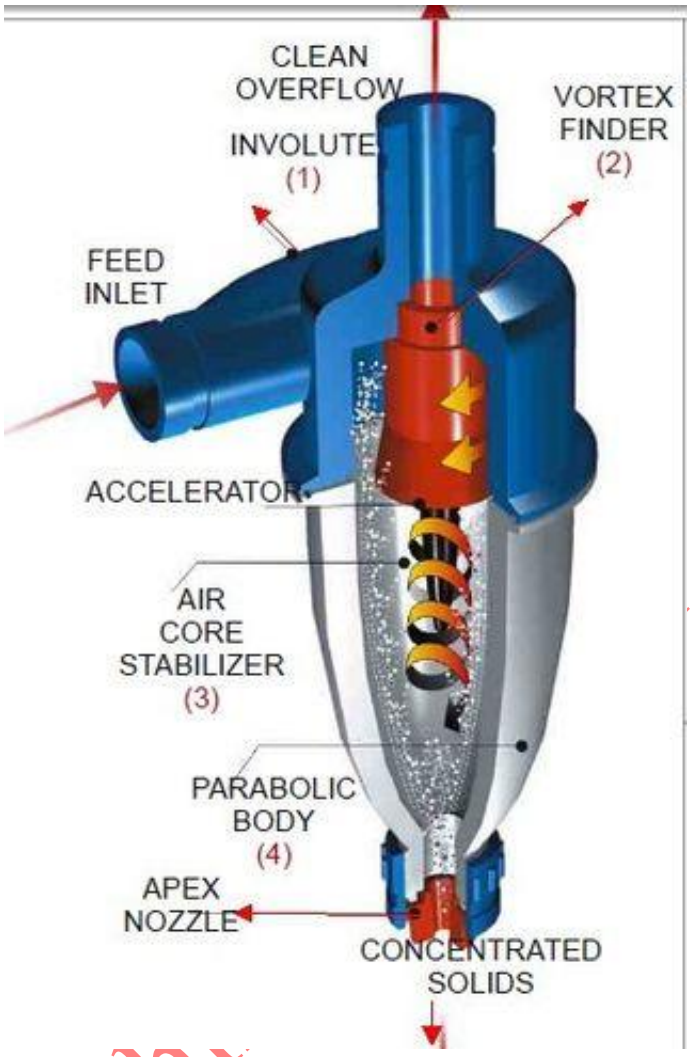


The decanting centrifuge (desilter) consists of rotating cone-shaped drum which has a screw conveyor attached to its interior . rotation of the cone creates a centrifugal force that throws the heavier particles to the outer housing. The screw conveyor moves the separated particles to the discharge.

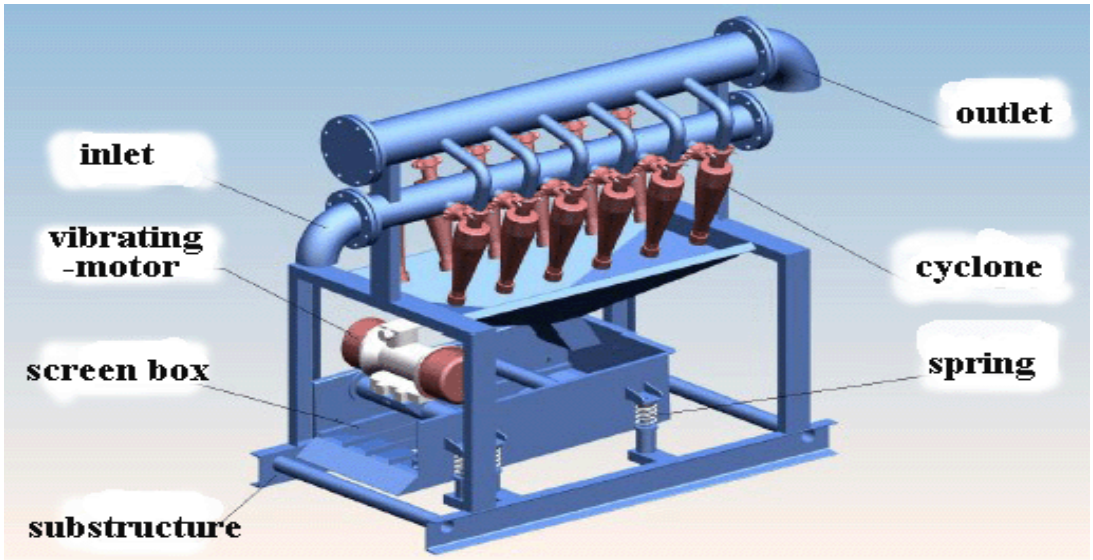


Structure of desilter

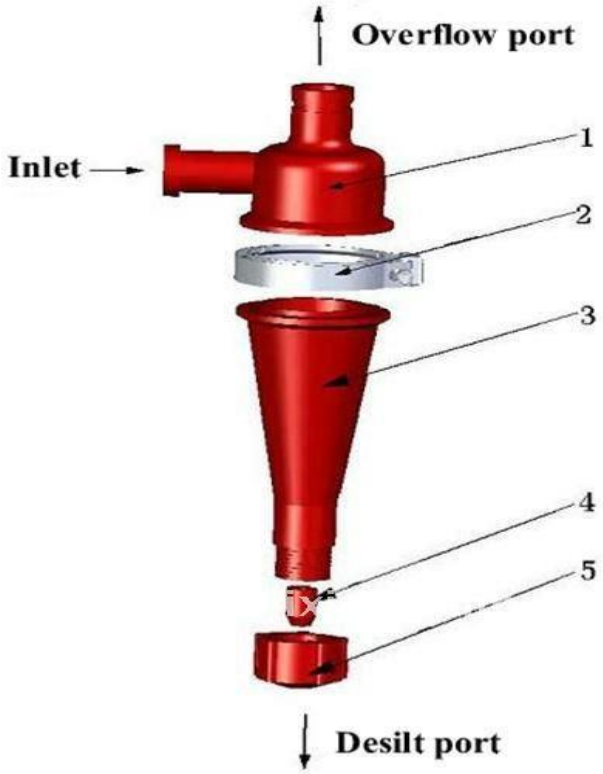


1-Upper cover · 2-Hoop · 3-Cone · 4-Jet · 5-Nut


When the amount of entrained formation gas leaving settling pit becomes too great, it can be separated using a degasser. A vacuum pump mounted on the top of the chamber removes gas from the chamber. The mud flows across inclined flat surface in the chamber in thin layers, which allows the gas bubbles that have been enlarged by the reduced to be separated from the mud more easily. Mud is drawn through the chamber at a reduced pressure of about 5 psia by a mud jet located in the discharge line.



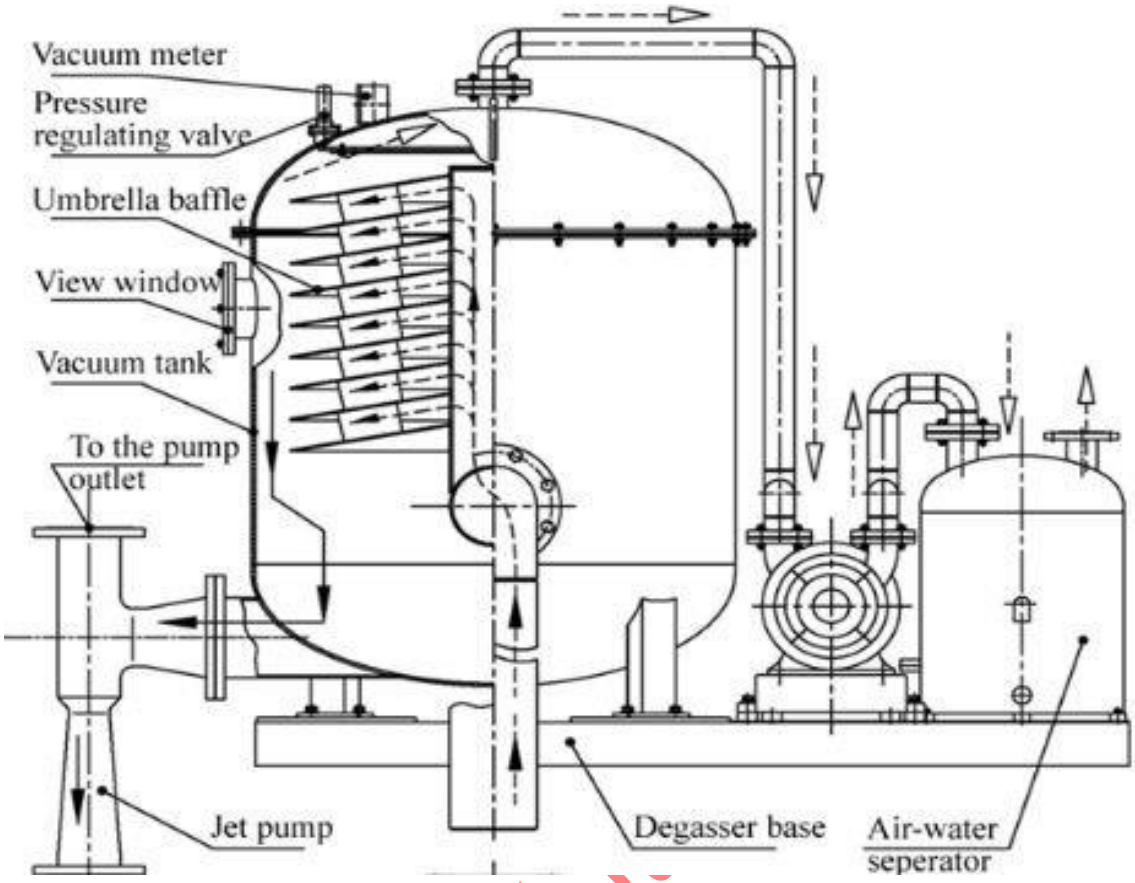


## CIRCULATING SYSTEM COMPLEMENTARY PARTS:

- ***mud return line***: A trough or pipe, placed between the surface connections at the well bore and the shale shaker. Drilling mud flows through it upon its return to the surface from the hole.

- ***standpipe***: a vertical pipe rising along the side of the derrick or mast, which joins the discharge line leading from the mud pump to the rotary hose and through which mud is pumped going into the hole.

-***stand pipe manifold***: is a series of lines, gauges and valves used for routing mud from discharge line coming from the pumps and delivers the mud to the standpipe.

-***kelly*** hose: the hose on a rotary drilling rig that conducts the drilling fluid from the mud pump and standpipe to the swivel and kelly; also called the mud hose or the rotary hose. It is a steel-reinforced, flexible hose that is installed between the standpipe and the swivel or top drive.


mud return line


standpipe manifold

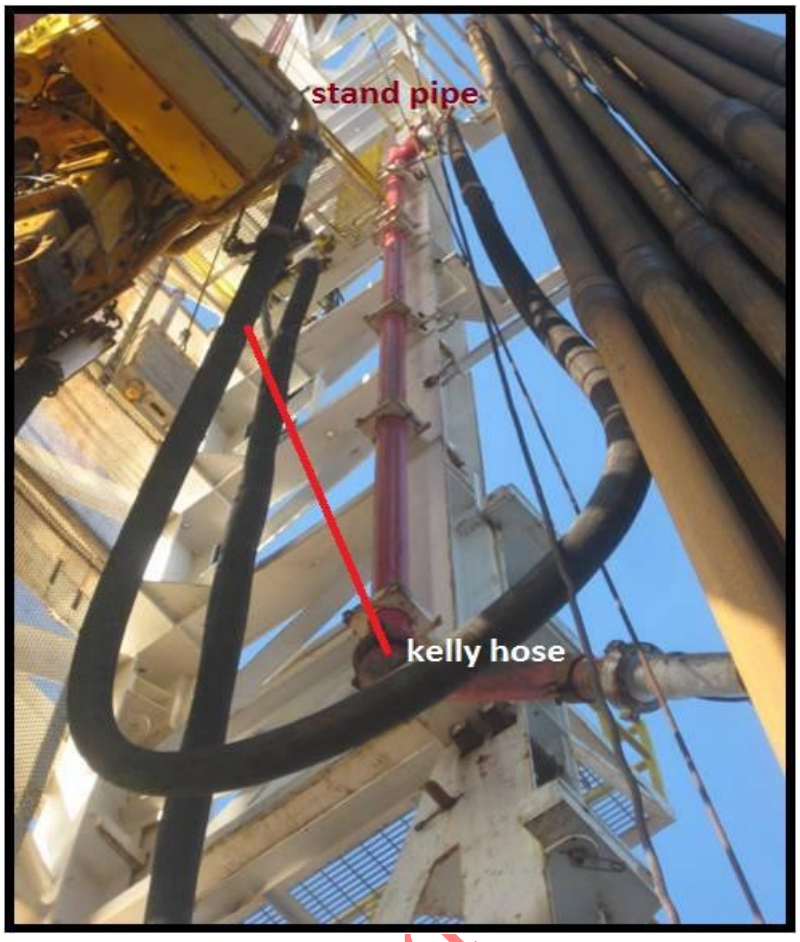




## DRILLING FLUIDS:

Drilling fluids include both gases and liquids, liquids are called drilling mud, where the drilling mud is one of the most important elements of any drilling operation. The mud has a number of functions which must all be optimized to ensure safety and minimum hole problems. Failure of the mud to meet its design functions can prove extremely costly in terms of materials and time, and can also jeopardise the successful completion of the well and may even result in major problems such as stuck pipe, kicks or blowouts.

There are basically two types of drilling mud: water-based and oil-based, depending on whether the continuous phase is water or oil. the water-base mud is the most commonly used. The use of oil-base mud is usually limited to drill extremely hot formations or formations that are affected adversely by water-base muds. Where the use of gasses is limited to formations that are competent (hard) and impermeable. Gas–liquid mixtures can be used when only a few formations capable of producing water at significant rates are encountered. Then there are a multitude of additives which are added to either change the mud density or change its chemical properties.

### Drilling mud selection: (Data REQUIREMENTS)

The following information should be collected and used when selecting drilling fluid or fluids for a particular well. It should be noted that it is common to utilize two or three different fluid types on a single well.

1-The range of temperature, strength, permeability, and pore fluid pressure exhibited by formations (Pore pressure /fracture gradient plots to establish the minimum / maximum mud weights to be used on the whole well).
2- Offset well data (drilling completion reports, mud recaps, mud logs etc.) from similar wells in the area to help establish successful mud systems, problematic formations, potential hazards, estimated drilling time etc.
3- Types of formations to be drilled.
4-Casing design program and casing seat depths. The casing scheme effectively divides the well into separate sections; each hole section may have similar formation types, similar pore pressure regimes or similar reactivity to mud.
4- The water quality available.
5-Restrictions that might be enforced in the area i.e. government legislation in the area, environmental concerns, etc.

## DRILLING FLUID FUNCTIONS:

The drilling mud must perform the following functions:

**1-cool the drill bit and lubricates its teeth**: one of the prime functions of the drilling fluid or mud is to cool the drill bit and lubricate its teeth. The drilling action requires a considerable amount of mechanical energy in the form of weight on bit, rotation, and hydraulic energy. A large proportion of this energy is dissipated as heat, which must be remove to allow the drill bit to function properly, the drilling mud also helps the removing of the rock cuttings from the space between the bit teeth, thereby preventing **bit balling** which is one of the common problems in drilling process.

**2-lubricates and cool the drillstring:** a rotary drillstring generates a considerable amount of heat which must be dissipated outside the hole. The drilling mud helps to cool the drillstring by absorbing the heat and releasing it, by convection and radiation, to air surrounding the surface mud tanks (pits). The mud also, provides lubrication by reducing friction between drillstring and borehole walls. Lubrication is usually achieved by the addition of bentonite, oil, graphite, etc.

**3-control formation pressure:** for safe drilling, high formation pressure must be contained within the hole to prevent damage to equipment and injury to personnel. The drilling mud achieves this by providing a hydrostatic pressure just greater than the formation pressure. For effective drilling, the difference between the hydrostatic pressure and formation pressure should be zero. the hydrostatic pressure depends on the mud weight which, in turn, depends on the type of solids added to the fluid making up the mud and the density of the continuous phase. In practice, an overbalance,(Where the pressure in the wellbore in higher than the pressure in the formation), 100 to 200 psi (trip margin) is normally used to provide an adequate safe guard against well kick. The pressure overbalance sometimes referred to as chip hold down pressure (CHDP), and its value directly influences penetration rate. In general, penetration rate decreases as (CHDP) increases. When an abnormally pressured formation is encountered, the (CHDP)

becomes negative and sudden increase in penetration rate is observed. This is normally taken as an indication of a well kick.

**4-carry cuttings out of the hole:** for effective drilling, cuttings generated by the bit must be removed immediately. The drilling mud carries these cuttings up the hole and to the surface, to be separated from the mud. The removal of cuttings depends on the viscous properties called "Yield Point" which influences the carrying capacity of the flowing mud and "gels" which help to keep the cuttings in suspension when the mud is static to prevent them from accumulating on the bottom of the hole and causing pipe sticking. The flow rate of mud is also critical in cleaning the hole.

**5-stabilize the wellbore and prevent it from caving in:** the formation of a good mud cake helps to stabilize the walls of plaster to interior walls (like plastering a room walls to keep them from flaking). The pressure differential between hydrostatic pressure of mud and that of the wellbore stable. Shale stability is largely dependent on the type of mud used To minimise the swelling stresses caused by the reaction of the mud with the shale formations. This reaction can cause hole erosion or cavings resulting in an unstable wellbore. Minimisation of wellbore instability is provided by the "inhibition" character of the drilling mud.. At last it should be noted that the best way to keep a hole stable is to reduce time during which the hole is kept open.

**6-helps in the evaluation and interpretation of well logs:** wire line logs are run in mud-fills holes in order to ascertain the existence and size of hydrocarbons zones. Open hole logs are also run to determine porosity, boundaries between formations, location of geopressured (or abnormally pressured) formations and the site for the next well.
Hence, the drilling mud must possess such properties that it will aid the production of good logs (Log response may be enhanced through selection of specific fluids and conversely, use of a given fluid may eliminate a log from use. Drilling fluids must be evaluated to assure compatibility with the logging program).



**7-limiting the corrosion of drilling equipment:** the drilling mud in most cases will have water that contains dissolved salts as its base liquid. This serves as a medium in which corrosion takes place. If corrosion is suspected, then the cause should be determined and steps taken to prevent damage of the equipment. It has been found that in muds containing oil as the continuous phase, little or no corrosion occurs.

**8-Transmit Hydraulic Horsepower to Bit:** Hydraulic horsepower generated at the bit is the result of flow volume and pressure drop through the bit nozzles. This energy is converted into mechanical energy which removes cuttings from the bottom of the hole and improves the rate of penetration.

## DRILLING FLUID CLASSIFICATIONS:

Drilling fluids are separated into three major classifications (Figure below):

- Pneumatic.
- Oil-Based.
- Water-Based.

## A-Pneumatic drilling fluids:

Pneumatic (air/gas based) fluids are not common systems as they have limited applications such as the drilling of depleted reservoirs or aquifers or areas where abnormally low formation pressures may be encountered. where normal mud weights would cause severe loss circulation. An advantage of pneumatic fluids over liquid mud systems can be seen in increased penetration rates. Cuttings are literally blown off the cutting surface ahead of the bit as a result of the considerable pressure differential. The high pressure differential also allows formation fluids from permeable zones to flow into the wellbore. Air/gas based fluids are ineffective in areas where large volumes of formation fluids are encountered. A large influx of formation fluids requires converting the pneumatic fluid to a liquid-based system as their properties tends to break down in the presence of water.. As a result, the chances of losing circulation or damaging a productive zone are greatly increased.
consideration when selecting pneumatic fluids is well depth. They are not recommended for wells below about 6-8000 ft (1800-2400 m)because the volume of air required to lift cuttings from the bottom of the hole can become greater than the surface equipment can deliver.



**Penetration rate:** is the speed at which a drill bit breaks the rock under it to deepen the borehole. Also known as penetration rate or drill rate. It is normally measured in feet per minute or meters per hour, but sometimes it is expressed in minutes per foot. Generally, ROP increases in fast drilling formation such as sandstone (positive drill break) and decreases in slow drilling formations such as shale (reverse break). ROP decreases in shale due to diagnesis and overburden stresses.

*Drilling Fluids Classification*

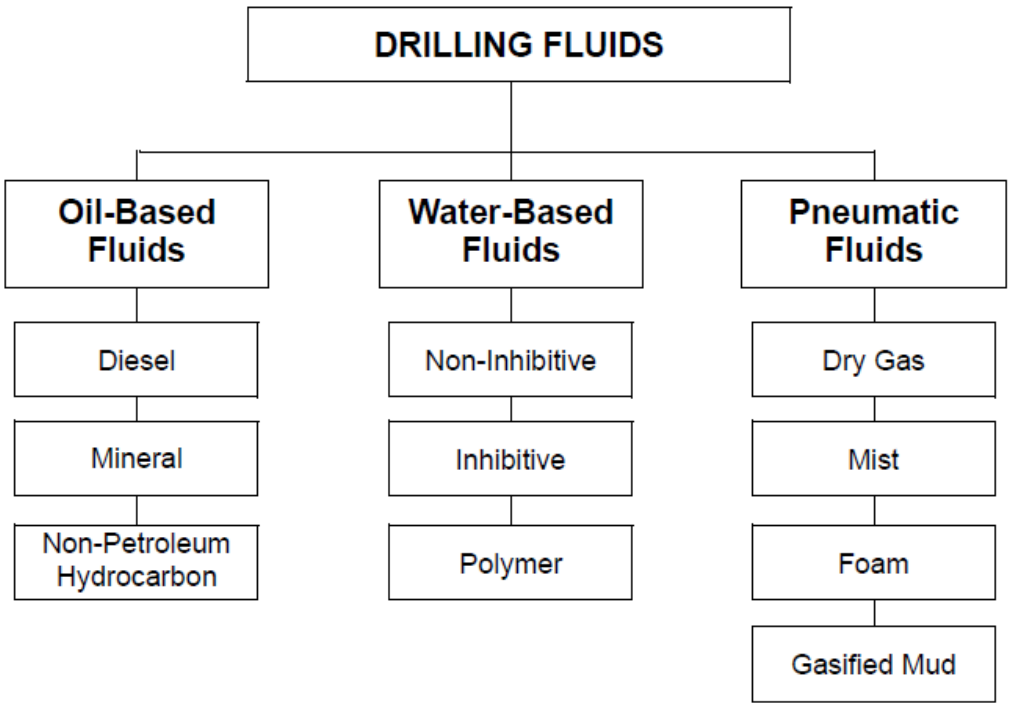

**B-Oil-based mud :**

An oil based mud system is one in which the continuous phase of a drilling fluid is oil. When water is added as the discontinuous phase then it is called an invert emulsion. A primary use of oil-based fluids is to drill troublesome shales and to improve hole stability. They are also applicable in drilling highangle/ horizontal wells because of their superior lubricating properties and low friction values between the steel and formation which result in reduced torque and drag and ability to prevent hydration of clays. These fluids are particularly useful in drilling production zones, shales and other water sensitive formations, as clays do not hydrate or swell in oil.. They may also be selected for special applications such as high temperature/high pressure wells, minimizing formation damage, and native-state coring. Another reason for choosing oil-based fluids is that they are resistant to contaminants such as anhydrite, salt, and CO2 and H2S acid gases.

Cost is a major concern when selecting oil-based muds. Initially, the cost per barrel of an oil-based mud is very high compared to a conventional water-based mud system. However, because oil muds can be reconditioned and reused, the costs on a multi-well program may be comparable to using water-based fluids. Also, buy-back policies for used oil-based muds can make them an attractive alternative in situations where the use of water-based muds prohibit the successful drilling and/or completion of a well.

Today, with increasing environmental concerns, the use of oil-based muds is either prohibited or severely restricted in many areas. In some areas, drilling with oil-based fluids requires mud and cuttings to be contained and hauled to an approved disposal site. The costs of containment, hauling, and disposal can greatly increase the cost of using oil-based fluids.

There are two types of oil based muds:

- Invert Emulsion Oil Muds.
- Pseudo Oil Based Mud.

**1-INVERT EMULSION OIL MUD:**

The basic components of a typical low toxicity invert emulsion fluid are:

Base Oil: Only low toxic base oil should be used as approved by the authorities (such as the DTI " Department of Trade and Industry" in the UK). This is the external emulsion phase.

**Water**: Internal emulsion phase. This gives the Oil/Water Ratio (OWR), the% of each part as a total of the liquid phase. Generally, a higher OWR is used for drilling troublesome formations. The salinity of the water phase can be controlled by the use of dissolved salts, usually calcium chloride. Control of salinity in invert oil muds is necessary to "tie-up" free water molecules and prevent any water migration between the mud and the open formation such as shales.

**Emulsifier**: Often divided into primary and secondary emulsifiers. These act at the interface between the oil and the water droplets. Emulsifier levels are held in excess to act against possible water and solid contamination.

**Wetting Agent**: This is a high concentration emulsifier used especially in high density fluids to oil wet all the solids. If solids become water wet they will not be suspended in the fluid, and would settle out of the system.

**Organophillic Clay**: These are clays treated to react and hydrate in the presence of oil. They react with oil to give both suspension and viscosity characteristics.

**Lime**: Lime is the primary ingredient necessary for reaction with the emulsifiers to develop the oil water interface. It is also useful in combating acidic gases such as CO2 and H2S. The concentration of lime is usually held in excess of 2 to 6 ppb, depending on conditions.

**2- PSEUDO OIL BASED MUD:**

To help in the battle against the environmental problem of low toxicity oil based muds and their low biodegradability, developments have been made in producing a biodegradable synthetic base oil. A system which uses synthetic base oil is called a Pseudo Oil Based Mud (SOB) and is designed to behave as close as possible to low toxic oil based mud (LTOBM). It is built in a fashion akin to normal oil based fluids, utilising modified emulsifiers.

SOB muds are an expensive systems and should only be considered in drilling hole sections that cannot be drilled using water based muds without the risk of compromising the well objectives.



## C- WATER-BASED FLUIDS:

These are fluids where water is the continuous phase. The water may be fresh, brackish or seawater, whichever is most convenient and suitable to the system or is available..Water based fluids are the most extensively used drilling fluids. They are generally easy to build, inexpensive to maintain, and can be formulated to overcome most drilling problems. In order to better understand the broad spectrum of water-based fluids, they are divided into three major subclassifications :

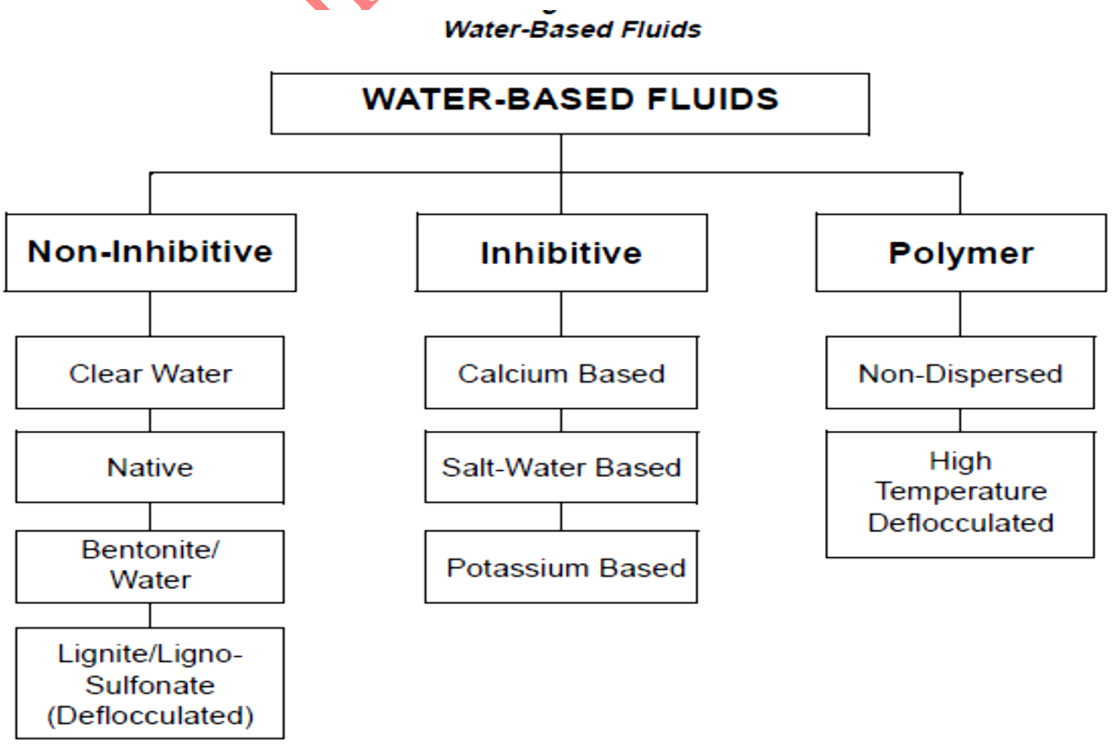

**1-Non-Inhibitive Fluids**:
Those which do not significantly suppress clay swelling, are generally comprised of native clays or commercial bentonites with some caustic soda or lime. They may also contain deflocculants and/or dispersants such as: lignites, lignosulfonates, or phosphates. Non-inhibitive fluids are generally used as spud muds. Native solids are allowed to disperse into the system until rheological properties can no longer be controlled by water dilution.

2- **Inhibitive Fluids**
Those which appreciably retard clay swelling and, achieve inhibition through the presence of cations; typically, Sodium (Na+), Calcium (Ca++) and Potassium (K+). Generally, K+ or Ca++, or a combination of the two, provide the greatest inhibition to clay dispersion. These systems are generally used for drilling hydratable clays and sands containing hydratable clays. Because the source of the cation is generally a salt, disposal can become a major portion of the cost of using an inhibitive fluid.

3- **Polymer Fluids**
Those which rely on macromolecules, either with or without clay interactions to provide mud properties, and are very diversified in their application. These fluids can be inhibitive or non-inhibitive depending upon whether an inhibitive cation is used. Polymers can be used to viscosify fluids, control filtration properties, deflocculate solids, or encapsulate solids.
The thermal stability of polymer systems can range upwards to 400°F. In spite of their diversity, polymer fluids have limitations. Solids are a major threat to successfully running a cost-effective polymer mud system.



## DRILLING FLUID ADDITIVES:

There are many drilling fluid additives which are used to develop the key properties of the mud. The variety of fluid additives reflect the complexity of mud systems currently in use. The complexity is also increasing daily as more difficult and challenging drilling conditions are encountered. We shall limit ourselves to the most common types of additives used in water-based and oil based muds. These are:

- Weighting Materials
- Viscosifiers
- Filtration Control Materials
- Rheology Control Materials
- Alkalinity And Ph Control Materials
- Lost Circulation Control Materials
- Lubricating Materials
- Shale Stabilizing Materials

## A-WEIGHTING MATERIALS:

Weighting materials or densifers are solids material which when suspended or dissolved in water will increase the mud weight. Most weighting materials are insoluble and require viscosifers to enable them to be suspended in a fluid. Clay is the most common viscosifier.

Mud weights higher than water (8.3 ppg) are required to control formation pressures and to help combat the effects of sloughing or heaving shales that may be encountered in stressed areas.

## DESCRIPTION OF MOST COMMONLY USED WEIGHTING MATERIALS:

### 1. Barite

Barite (or barytes) is barium sulphate, $BaSO_4$ and it is the most commonly used weighting material in the drilling industry. Barium sulphate has a specific gravity in the range of 4.20 - 4.60. The specific gravity of Most commercial barite contain impurities including quartz, chert, calcite, anhydrite, and various silicates which slower its specific gravity. It is normally supplied to a specification where the specific gravity is about 4.2. Barite is preferred to other weighting materials because of its low cost and high purity. Barite is normally used when mud weights in excess of 10 ppg are required. Barite can be used to achieve densities up to 22.0 ppg in both water- based and oil -based muds. However, at very high muds weights (22.0 ppg), the rheological properties of the fluid become extremely difficult to control due to the increased solids content.


### 2. Iron Minerals

Iron ores have specific gravities in excess of 5. They are more erosive than other weighting materials and may contain toxic materials. The mineral iron comes from several iron ores sources including: haematite/magnetite, illmenite and siderite.The most commonly used iron minerals are:

**Iron Oxides**: principally haematite, $Fe_2O_3$. Iron oxides have several disadvantages including: magnetic behaviour which influences directional tool and magnetic logs, toxciticity an difficulty in controlling mud properties.
**Iron Carbonate:** Siderite is a naturally occurring ferrous carbonate mineral ($FeCO_3$).
**Illmenite**: The mineral illmenite, ferrous titanium oxide ($FeTiO_3$).

**3- Calcium Carbonates**
**Calcium carbonate** ($CaCO_3$) is one of the most widely weighting agents especially in non-damaging drilling fluids. Its main advantage comes from its ability to react and dissolve in hydrochloric acid. Hence any filter cake formed on productive zones can be easily removed thereby enhancing production. It has a specific gravity of 2.60 - 2.80 which limits the maximum density of the mud to about 12.0 ppg Calcium carbonate is readily available as ground limestone, marble or oyster shells.

**Dolomite** is a calcium - magnesium carbonate with a specific gravity of 2.80 - 2.90. The maximum mud density achieved is 13.3 ppg.

**4- Lead Sulphides**
Galena (PbS) has a specific gravity of 7.40 - 7.70 and can produce mud weights of up to 32 ppg. Galena is expensive and toxic and is used mainly on very high pressure wells.

**5- Soluble Salts**
Soluble salts are used to formulate solids free fluids and are used mainly as workover and completion fluid. Depending on the type of salt used, fluid densities ranging from 9.0 - 21.5 ppg (sg =1.08 - 2.58) can be prepared.

**B-VISCOSIFIERS:**
The ability of drilling mud to suspend drill cuttings and weighting materials depends entirely on its viscosity. Without viscosity, all the weighting material and drill cuttings would settle to the bottom of the hole as soon as circulation is stopped. One can think of viscosity as a structure built within the water or oil phase which suspends solid material. In practice, there are many solids which can be used to increase the viscosity of water or oil. The effects of increased viscosity can be felt by the increased resistance to fluid flow; in drilling this would manifest itself by increased pressure losses in the circulating system.

**Table 7.3 Materials used as viscosifiers, After Reference 1**

| Material | Principal Component |
|---|---|
| Bentonite | Sodium/Calcium Aluminosilicate |
| CMC | Sodium Carboxy-methyle cellulose |
| PAC | Poly anionic Cellulose |
| Xanthan Gum | Extracellullar Microbial Polysaccharide |
| HEC | Hyroxy-ethyl Cellulose |
| Guar Gum | Hydrophilic Polysaccharide Gum |
| Resins | Hydrocarbon co-polymers |
| Silicates | Mixed Metal Silicates |
| Synthetic Polymers | High molecular weight Polyacrylamides/polyacrylates |

**1-CLAYS:**

Clays are defined as natural, earthy, fine-grained materials that develop plasticity when wet. They are formed from the chemical weathering of igneous and metamorphic rocks. The major source of commercial clays is volcanic ash; the glassy component of which readily weathers very readily, usually to bentonite.

**Bentonite:** This is the most widely used additive in the oil industry. The name, bentonite, is a commercial name used to market a clay product found in the Ford Benton shale in Rock Creek, Wyoming, USA. Bentonite is defined as consisting of fine-grained clays that contain not less than 85% Montmorillonite which belongs to the class of clay minerals known as smectites. Bentonite is classified as sodium bentonite or calcium bentonite, depending on the dominant exchangeable cation. In fresh water, sodium bentonite is more reactive than calcium bentonite and hence, in terms of performance, bentonite is classed as "high yield" (Sodium Bentonite) or "low yield" (Calcium Bentonite). Bentonite is used to build viscosity in water which is required to suspend weighting materials and drillcuttings. When clay is dispersed in water, viscosity is developed when the clay plates adsorb water layers on to their structure.



**Attapulgite**

Attapulgite belongs to a quite different family of the clay minerals Attapulgite-based muds have excellent viscosity and yield strength and retain these properties when mixed with salt water. However, they have the disadvantage of suffering high water loss thereby giving poor sealing properties across porous and permeable formations.

**Organophillic Clays 1**

Organophillic clays are made from normal clays (bentonite or attapulgite) and organic cations. The organic cations replace the sodium or calcium cations originally present on the clay plates. Organophillic clays can be dispersed in oil to form a viscous structure similar to that built by bentonite in water.

**POLYMERS:**

Polymers are used for filtration control, viscosity modification, flocculation and shale stabilisation. When added to mud, polymers cause little change in the solid content of the mud. Polymers are chemicals consisting of chains made up of many repeated small units called monomers.Polymers are formed from monomers by a process called polymerization. The repeating units (monomers) that make up the polymer may be the same, or two or more monomers may be combined to form copolymers. Structurally, the polymer may be linear or branched and these structures, either linear, branched, or both, may be cross-linked, i.e. tied together by covalent bonds.

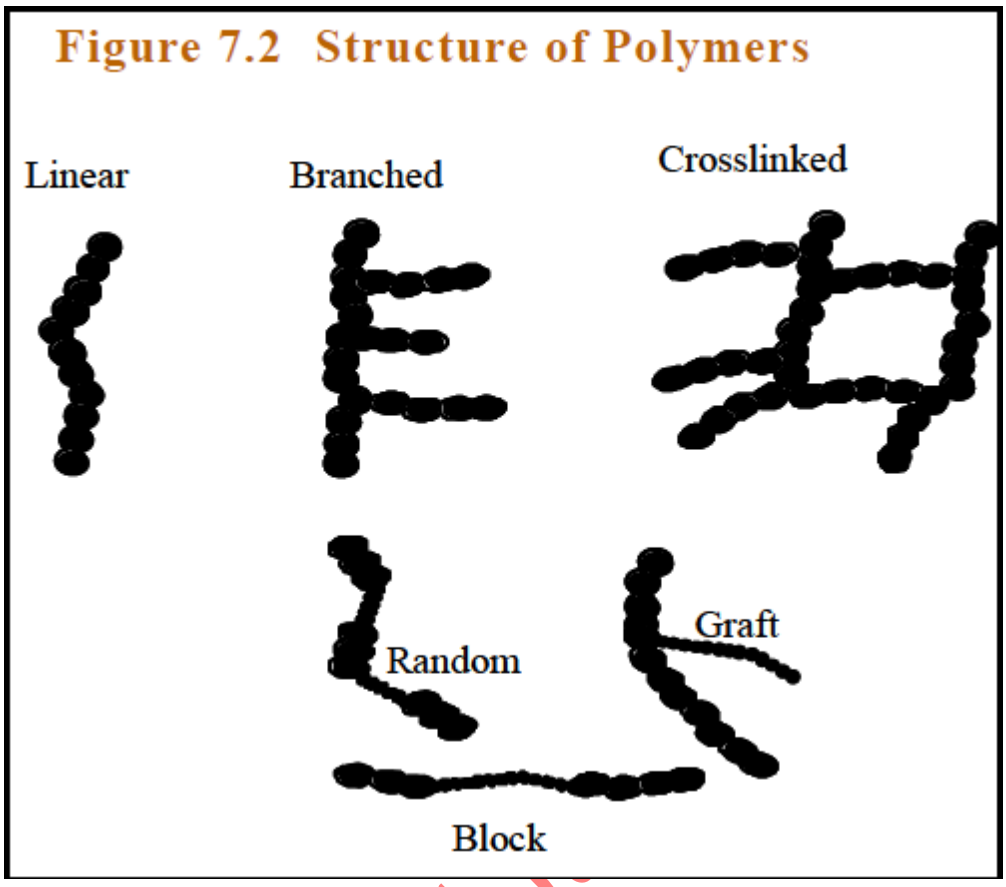


**1-Starch:**
**2-Guar Gum**
**3-Xanthan Gum**:
**4-Carboxymethylcellulose (CMC)**
Sodium carboxymethylcellulose (usually abbreviated as CMC) is an anionic polymer produced by the treatment of cellulose with caustic soda and then monochloro acetate. The molecular weight ranges between 50,000 and 400,000. CMC is used for viscosification and filtration reduction in heavily weighted muds and wherever little viscosification of the fluid phase of the mud is desirable.

## C-FILTRATION CONTROL MATERIALS:

Filtration control materials are compounds which reduce the amount of fluid that will be lost from the drilling fluid into a subsurface formation caused by the differential pressure between the hydrostatic pressure of the fluid and the formation pressure. Bentonite, polymers, starches and thinners or deflocculants all function as filtration control agents. Bentonite imparts viscosity and suspension as well as filtration control. The flat,"plate like" structure of bentonite packs tightly together under pressure and forms a firm compressible filter cake, preventing fluid from entering the formation.Polymers such as Polyanionic cellulose (PAC) and Sodium Carboxy-methyl-cellulose (CMC) reduce filtrate mainly when the hydrated polymer chains absorb onto the clay solids and plug the pore spaces of the filter cake preventing fluid seeping through the filter cake. Thinners and deflocculants function as filtrate reducers by separating the clay flock's or groups enabling them to pack tightly to form a thin, flat filter cake.

## D-RHEOLOGY CONTROL MATERIALS:

When efficient control of viscosity and gel development cannot be achieved by control of viscosifier concentration, materials called "thinners", "dispersants", and/or "deflocculants" are added. These materials cause a change in the physical and chemical interactions between solids and/or dissolved salts such that the viscous and structure forming properties of the drilling fluid are reduced. Thinners are also used to reduce filtration and cake thickness, to counteract the effects of salts, to minimize the effect of water on the formations drilled, to emulsify oil in water, and to stabilize mud properties at elevated temperatures. Materials commonly used as thinners in clay- based drilling fluids are classified as: (1) plant tannins, (2) lignitic materials, (3) lignosulfonates, and (4) low molecular weight, synthetic, water soluble polymers.

## E-ALKALINITY AND PH CONTROL MATERIALS:

The pH affects several mud properties including:

• detection and treatment of contaminants such as cement and soluble carbonates

• solubility of many thinners and divalent metal ions such as calcium and magnesium

Alkalinity and pH control additives include: NaOH, KOH, Ca(OH)2, NaHCO3 and Mg(OH)2. These are compounds used to attain a specific pH and to maintain optimum pH and alkalinity in water base fluids.

## F-LOST CIRCULATION CONTROL MATERIALS:

Lost circulation can be cured by either reducing mud weight, using loss circulation material (LCM) or a combination of both. For severe losses, special plugs may be used to plug off the loss zone.



## G-LUBRICATING MATERIALS:

Lubricating materials are used mainly to reduce friction between the wellbore and the drillstring. This will in turn reduce torque and drag which is essential in highly deviated and horizontal wells. Lubricating materials include: oil (diesel, mineral, animal, or vegetable oils), surfactants, graphite, asphalt, gilsonite, polymer and glass beads.

## H-SHALE STABILIZING MATERIALS:

There are many shale problems which may be encountered while drilling sensitive highly hydratable shale sections. Essentially, shale stabilization is achieved by the prevention of water contacting the open shale section. This can occur when the additive encapsulates the shale or when a specific ion such as potassium actually enters the exposed shale section and neutralises the charge on it. Shale stablisers include: high molecular weight polymers, hydrocarbons, potassium and calcium salts (e.g. KCl) and glycols. Field experience indicates that complete shale stabilisation can not be obtained from polymers only and that soluble salts must also be present in the aqueous phase to stabilize hydratable shales.

## DRILLING MUD PROPERTIES:

The properties of a drilling fluid can be analysed by its physical and chemical attributes. The major properties of the fluid should be measured and reported daily in the drilling morning report. Each mud property contributes to the character of the fluid and must be monitored regularly to show trends, which can be used to

ascertain what is happening to the mud whilst drilling. There are many tests a fluid can have; the major ones are explained below:

## 1-MUD WEIGHT OR MUD DENSITY:

**Unit:** pounds per gallon (ppg or lb/gal).
**Apparatus**:Mud balance, or where gases may be entrapped in the mud due to high weights or thick mud, then a Pressure Balance should be used. Each should be calibrated at the start of the job to weigh 8.33 ppg with fresh water.As shown in the figure below, a cup is filled with a sample of mud and is then balanced on the mud balance which is calibrated to read mud weight directly.

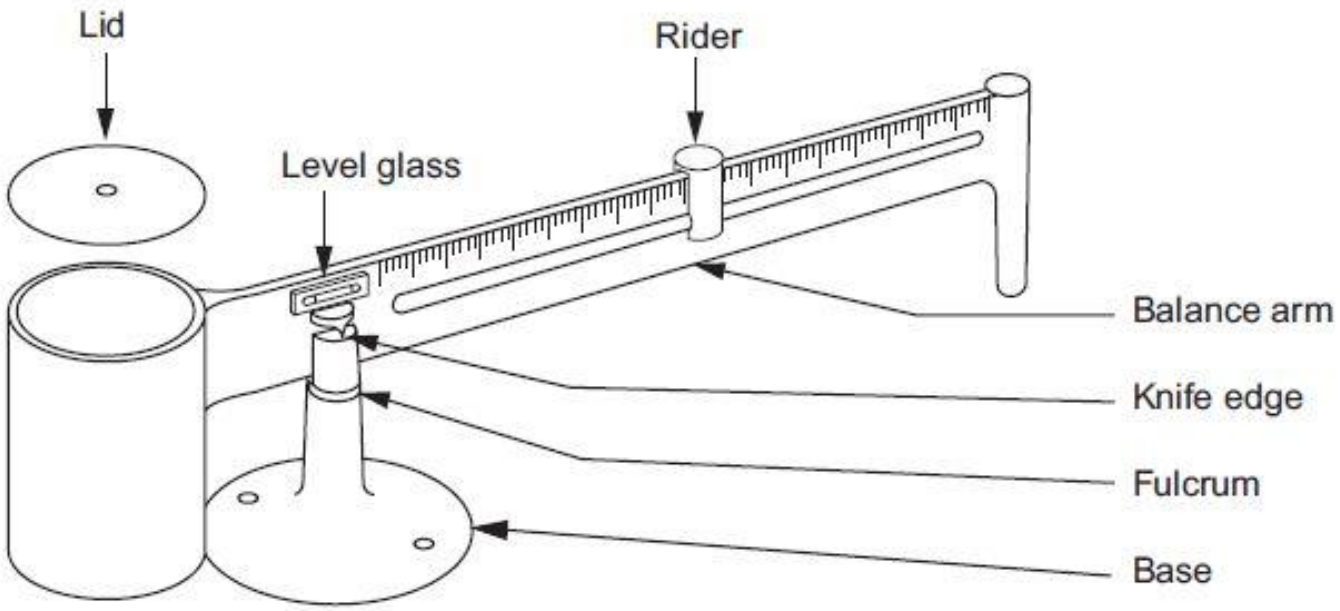


## 2-FUNNEL VISCOSITY:

**Unit:** Seconds per quart (sec/qt).
**Alternatives:** Seconds per litre (sec/lt).
1 quart = 0.946 litre.
**Apparatus**: Marsh Funnel. In use, the funnel is held vertically with the end of the tube closed by a finger. The liquid to be measured is poured through the mesh to remove any particles which might block the tube. When the fluid level reaches the mesh, the amount inside is equal to the rated volume. To take the measurement, the finger is released as a stopclock is started, and the liquid is allowed to run into a measuring container. The time in seconds is recorded as a measure of the viscosity. This is usually calibrated to read 26 ± 0.5 seconds when testingwith fresh water.

**$\mu = \rho\ (t - 25)$**

**where $\mu$ = effective viscosity in centipoise**
**$\rho$ = density in g/cm³**
**t = quart funnel time in seconds**

The March Funnel is a simple device used for the routine monitoring of the viscosity, and should be performed alongside the mud weight check. Marsh funnel readings are affected by mud weight, solids content and temperature. The value from the Marsh funnel should only be used for comparison purposes and for monitoring trends.

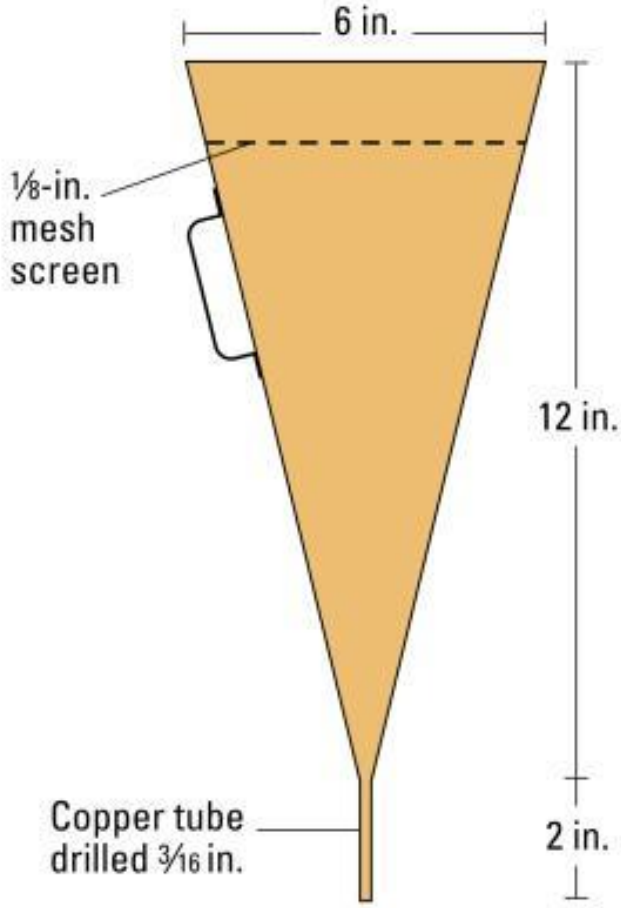


## 3-PLASTIC VISCOSITY (PV):

**Apparatus**:
Viscometer or rheometer is a device used to measure the viscosity and yield point of mud. A sample of mud is placed in a slurry cup and rotation of a sleeve in the mud gives readings which can be mathematically converted into plastic viscosity (PV) and yield point (YP)6. Multi-speed rheometer are recommended whenever possible since readings can be obtained at 600, 300, 200, 100,6 and 3 rpm. PV (in cP) is measured by taking the difference between the dial readings taken at the two highest speeds of 600 rpm and 300 rpm. If temperature is a factor, then the mud sample should be tested at 120 o F, with the mud in a heating cup.

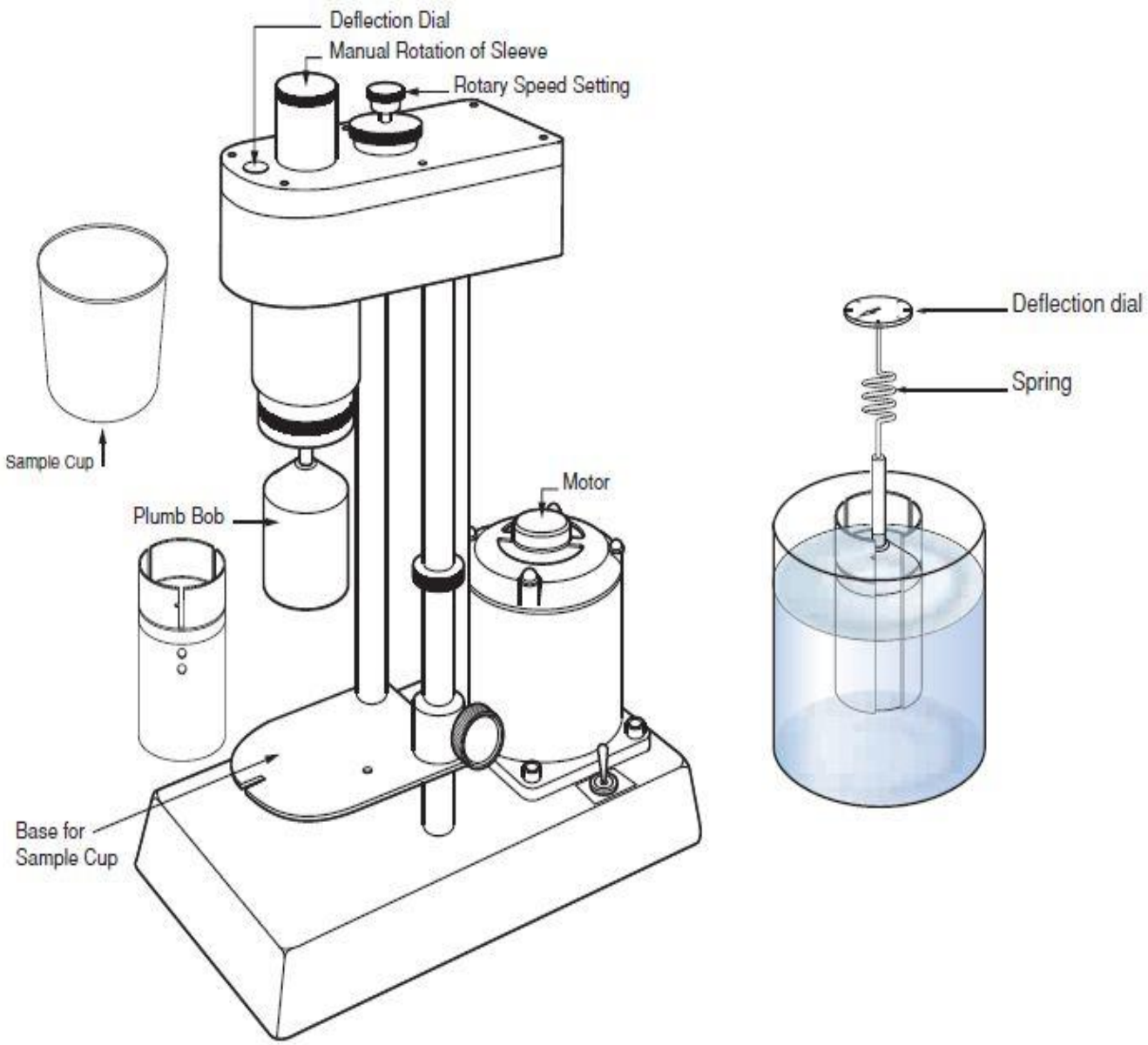


## 4-YIELD POINT:

**Unit:** lbf/100sq ft
**Alternatives:** Pascals (Pa) = lbs/100sq.ft x 0.48
**Apparatus:** Same equipment as used for measurement of plastic viscosity.

## 5-GEL STRENGTHS:

**Unit:** Same as Yield Point.
**Alternatives:** Same as Yield Point.
**Apparatus:** Six speed viscometer. There are two readings for gel strengths, 10 second and 10 minute with the speed of the viscometer set at 3 rpm. The fluid must have remained static prior to each test, and the highest peak reading will be reported.
**Applications:** The gel strength quantifies the thixotropic behaviour of a fluid; its ability to have strength when static, in order to suspend cuttings, and flow when put under enough force. Ideally the two values of gel strength should be close rather than progressively far apart.

## 6-FLUID LOSS AND FILTER CAKE:

**Fluid loss:**

**Unit:** ml / 30 minutes at100 psi (for API test) or 500 psi and BHT ( F) for high temperature /high pressure (HTHP).

**Filter Cake Thickness:** 1/32 inch.

**Apparatus:** Both tests work on filling a cell with drilling fluid, and sealing it shut. Inside the cell is a filter paper that has been placed between the mud and the aperture in the cell. Pressure is applied to the cell which forces the mud and solids through the filter paper. The solids accumulating on he filter paper form a filter cake and the the filtrate passing through the paper is collected in a graduated cylinder. The mud in the cell is pressurised for 30 min and the fluid or filtrate is collected and measured. The filter paper is also collected, washed, then examined and the deposited filter cake is measured. HPHT tests with the cell put under heat are usually carried out on wells where the temperature is greater than 200o F.

**Applications**: The fluid loss gives a representation of the fluids interaction with the well bore under simulated pressure and temperature conditions. Ideally the fluid should form a thin, flexible, impermeable layer (filter cake) against the wall and prevent fluid (filtrate) from entering the rock and reacting with the formations. A mud system with a low value of filtrate loss cause minimum swelling of clays and minimum formation damage.

HPHT filter unit

## THE ROTARY SYSTEM:

The rotary system includes all of the equipments used to achieve bit rotation. The main parts of the rotary system are: (1)the swivel, (2) Kelly, (3) rotary drive, (4) rotary table ,in modern rigs the Kelly and rotary table are replaced with top drive unit, (5) drillpipe, (6) drill collar, and (6) drill pit.

**A-The swivel:** supports the weight of the drillstring and permits rotation. The bail of the swivel is attached to the hook of the travelling block, and the gooseneck of the swivel provides a downward-pointing connection for the rotary hose. Swivels are rated according to their load capacities.

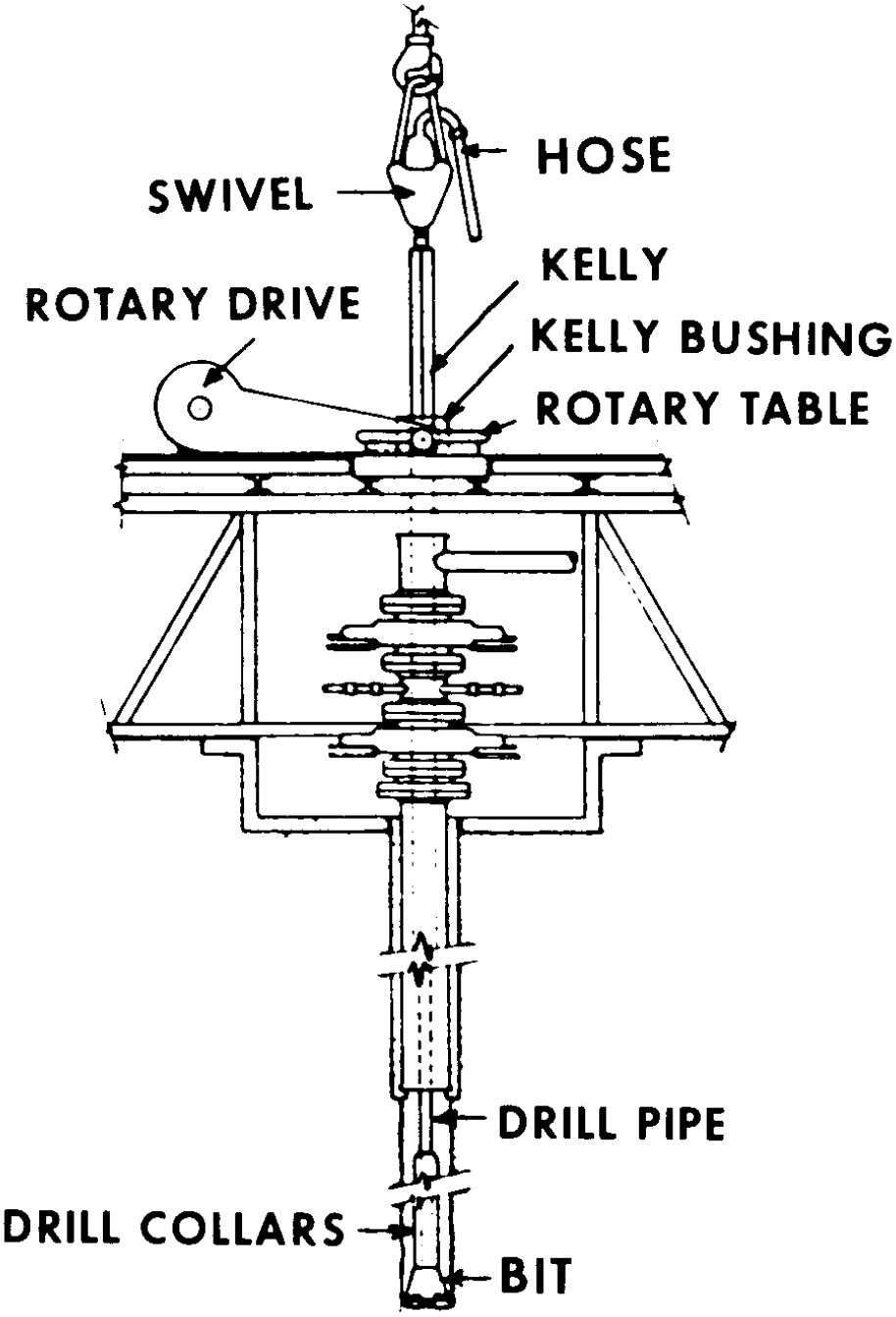


**Fig. 1.33** – Schematic of rotary system.[12]


**B-The Kelly:** is the first section of pipe below the swivel and consists of.

**1-Upper & lower Kelly cock:** a valve installed at one or both ends of the kelly. When a high pressure backflow occurs inside the drill stem (kick), the valve is closed to keep pressure off the swivel and rotary hose. The lower Kelly cock is always manual.

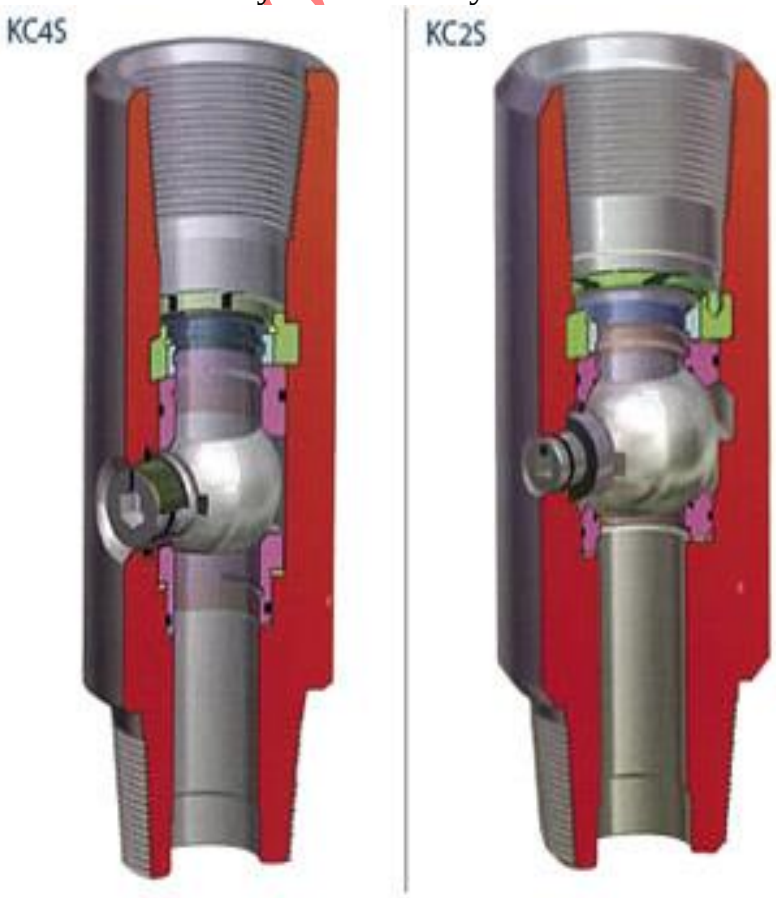

**2-Kelly bar:** in which the outside cross-section of the Kelly is square or hexagonal to permit it to be gripped easily for turning. Torque is transmitted to Kelly through Kelly pushing, which fit inside master pushing of the rotary table. The Kelly must be as straight as possible. The rotation of crooked Kelly causes a whipping motion that results in unnecessary wear on the crown block, drilling line, swivel, and threaded connections throughout a large part of the drillstring.
The Kelly thread is right handed on the lower end and left-handed on the upper end to permit normal right-handed rotation of the drillstring. The Kelly comes in lengths ranging from 40 to 54 ft.

**3- Kelly saver sub:** a heavy and relatively short length of pipe is used between the Kelly and the first joint of drillpipe The threads of the drill pipe mate with those of the sub, minimizing wear on the Kelly threads and provides a place for mounting a rubber protector to keep the Kelly centralized.



5- **kelly spinner**: a pneumatically operated device mounted on top of the kelly that, when actuated, causes the kelly to turn or spin.

**6-kelly drive bushing**: a device fitted to the rotary table through which the kelly passes and the means by which the torque of the rotary table is transmitted to the kelly and to the drill stem. Also called the drive bushing.

**7-master bushing:** a device that fits into the rotary table to accommodate the slips and drive the kelly bushing so that the rotating motion of the rotary table can be transmitted to the kelly.

The Kelly assembly main functions are:
• transmits rotation and weight-on-bit to the drillbit
• Supports the weight of the drillstring
• connects the swivel to the uppermost length of drillpipe; and
• conveys the drilling fluid from the swivel into th drill string


## C-THE ROTARY TABLE:

The principal component of a rotary, or rotary machine, used to turn the drill stem and support the drilling assembly. It has a beveled gear arrangement to create the rotational motion and an opening into which bushings are fitted to drive and support the drilling assembly. Power for rotary table usually supplied by independent rotary drive. However in some cases the power taken from the drawworks.


## TOP DRIVE SYSTEM:

A top drive is a mechanical device on a drilling rig that provides clockwise torque to the drill string to facilitate the process of drilling a borehole. It is an alternative to rotary table. It is located at the swivel place and allows a vertical movement up and down the derrick. The top drive is basically a combined rotary table and kelly. The top drive consists of a DC drive motor that connects directly to the drillstring without the need or a rotary table. The top drive is mounted on the rig's swivel, the swivel attaches to the travelling block and supports the drillstring weight. The top drive has a pipe handler consisting of a torque wrench and a conventional elevator to assist in pipe handling during connection and round trip operations. The elevator and elevator links are supported on a shoulder located on the extended swivel stem.



## TOP DRIVE SYSTEM ADVANTAGES:

### 1-Tripping and drilling time

An advantage of a top drive is that it allows the drilling rig to drill longer sections of a stand of drill pipe. A rotary table type rig can only drill 30-foot (9.1 m) (single drill pipe respectively) sections of drill pipe while a top drive can drill 60–90-foot (18 27 m) stands (double-triple respectively. A triple being three joints of drillpipe screwed together.), depending on the drilling rig type. . Some masts are only made to handle single lengths of drill pipes ("singles") and then the time becomes greater. Tripping speed can be improved by using automation for pipe handling and using an iron-roughneck to make-up or break the connections. Thus the total amount of time that goes into pulling out of the hole, or running in-hole, is less when using the top drive system, especially when the mast can handle three drill pipes at a time ("triples") with 90 feet long stands. Also, if an obstruction is encountered while running in-hole while using the top drive, the driller can circulate and rotate the bit right away to ream the hole. But in the case of a rotary table setup, the driller has to pull out one drill pipe and connect the Kelly, then run in to circulate and ream the hole and thereafter disconnect the Kelly to continue running in–hole, which is time consuming.

**2-Rig moves:**

The modern top drive has less components that make it more compact, and the rig is designed for ease of transport, e.g. the mud tanks are on wheels, much easier in loading and transportation compared to the convectional rig where the structures are more robust and thus take more space and time during transportation.

**3- Safety**

Like any other industry, the drilling industry is actively involved in innovations to improve the safety within the operational area of the rig, of paramount importance for every worker. Research has shown that machines are more accurate than human beings especially when it comes to routine jobs, therefore the less people involved in a certain job where they have been replace by machines, the higher the safety factor. The top drive rig has fewer people working manually on operations, thus achieving a higher safety factor than with the convectional system, where more people are involved.

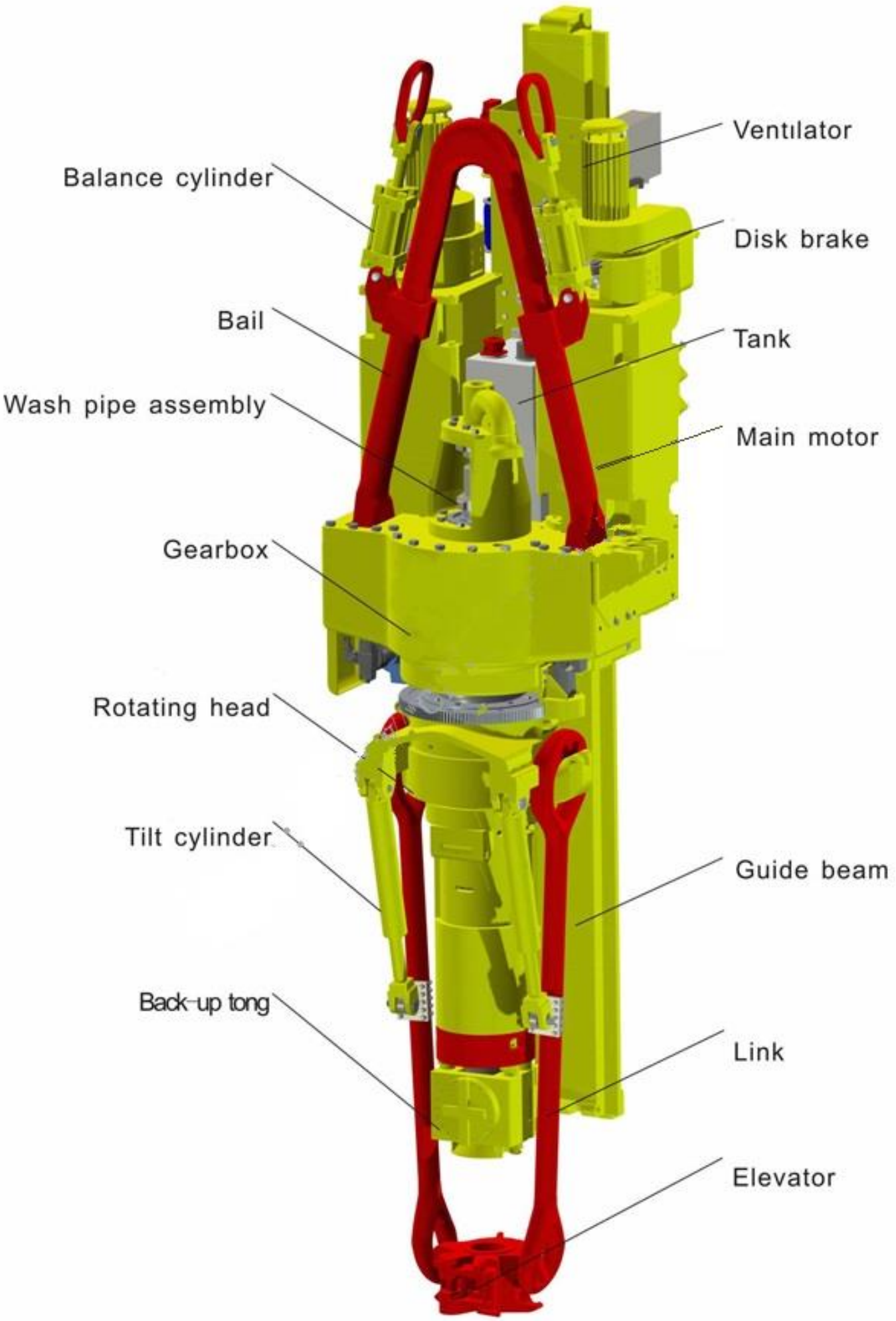
Ventılator
Balance cylinder
Disk brake
Bail
Tank
Wash pipe assembly
Main motor
Gearbox
Rotating head
Tilt cylinder
Guide beam
Back-up tong
Link
Elevator

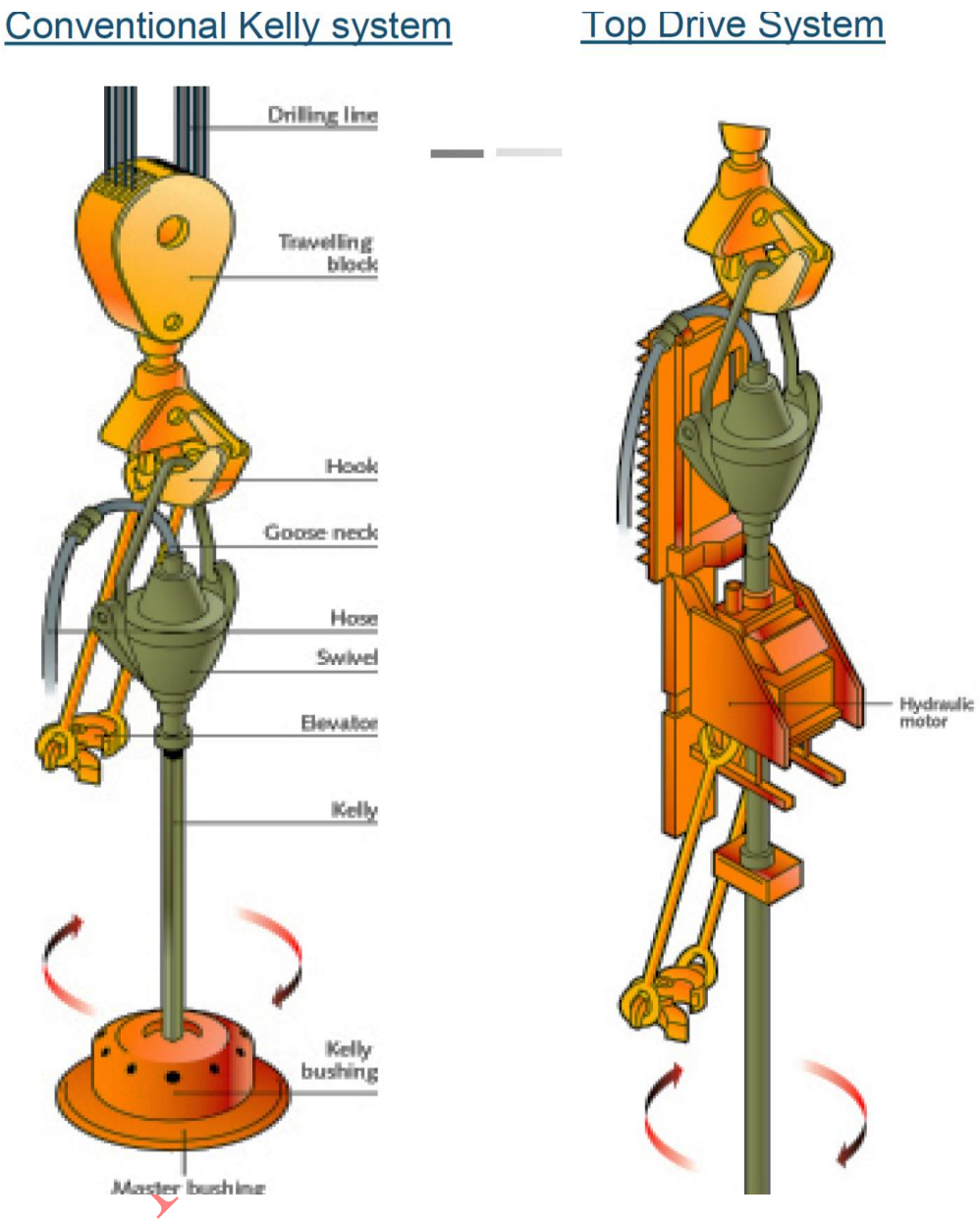


**4- Iron roughneck**

The iron roughneck is a pipe handling machine, able to do the spinning and make up or break up the pipes. The roughneck is remotely controlled and operated by the driller, providing a high level of automation for the rig and insuring proper make-up torque. This increases the level of safety to the rig crew and the overall drilling operation. Since it is able to simultaneously perform pipe handling and make-up functions it saves time on ever connection. This gives the top drive system some advantageous points over the convectional system.

## E-DRILLPIPE:

The major portion of the drillstring is composed of drillpipe. The drillpipe in common use is hot-rolled, pierced, seamless tubing, API has developed specifications for drillpipe. Drillpipe is specified by its outer diameter, weight per foot, steel grade, and range length. The range 2 drillpipe is used most commonly

Table 1.5. Drillpipe is furnished in the following API length ranges.

| Range | Length (ft) |
|---|---|
| 1 | 18 to 22 |
| 2 | 27 to 30 |
| 3 | 38 to 45 |

| API Drill Pipe Grade | Minimum Yield Stress (psi) | Minimum Tensile Stress (psi) | $\frac{\text{Yield Stress}}{\text{Tensile Stress}}$ |
|---|---|---|---|
| D | 55,000 | 95,000 | 0.58 |
| E | 75,000 | 100,000 | 0.75 |
| X | 95,000 | 105,000 | 0.70 |
| G | 105,000 | 115,000 | 0.91 |
| S | 135,000 | 145,000 | 0.93 |

. The strength of API drillpipe are shown above, grades D, X, E, G, and S-135. The grade of drill pipe describes the minimum yield strength of the pipe, API defines five grades: D,E, X,G and S. However, in oilwell drilling, only grades E,G and S are actually used. In most drillstring designs, the pipe grade is increased if extra strength is required.

DRILL PIPE CLASSIFICATION Drill pipe, unlike other oilfield tubulars such as casing and tubing, is re-used and therefore, often worn when run. As a result the drill pipe is classified to account for the degree of wear. The API has established guidelines for pipe classification in API RP7G. A summary of the classes follows.

New: No wear, has never been used.

Premium: Uniform wear and a minimum wall thickness of 80% of new pipe.

Class 2: Drill pipe with a minimum wall thickness of 65% with all the wear on one side so long as the cross sectional area is the same as the premium class.

Class 3: Drill pipe with a minimum wall thickness of 55% with all the wear on one side.

Drill pipe classification is an important factor in the design and use of drill pipe since the degree of wear will affect the pipe properties and strengths.



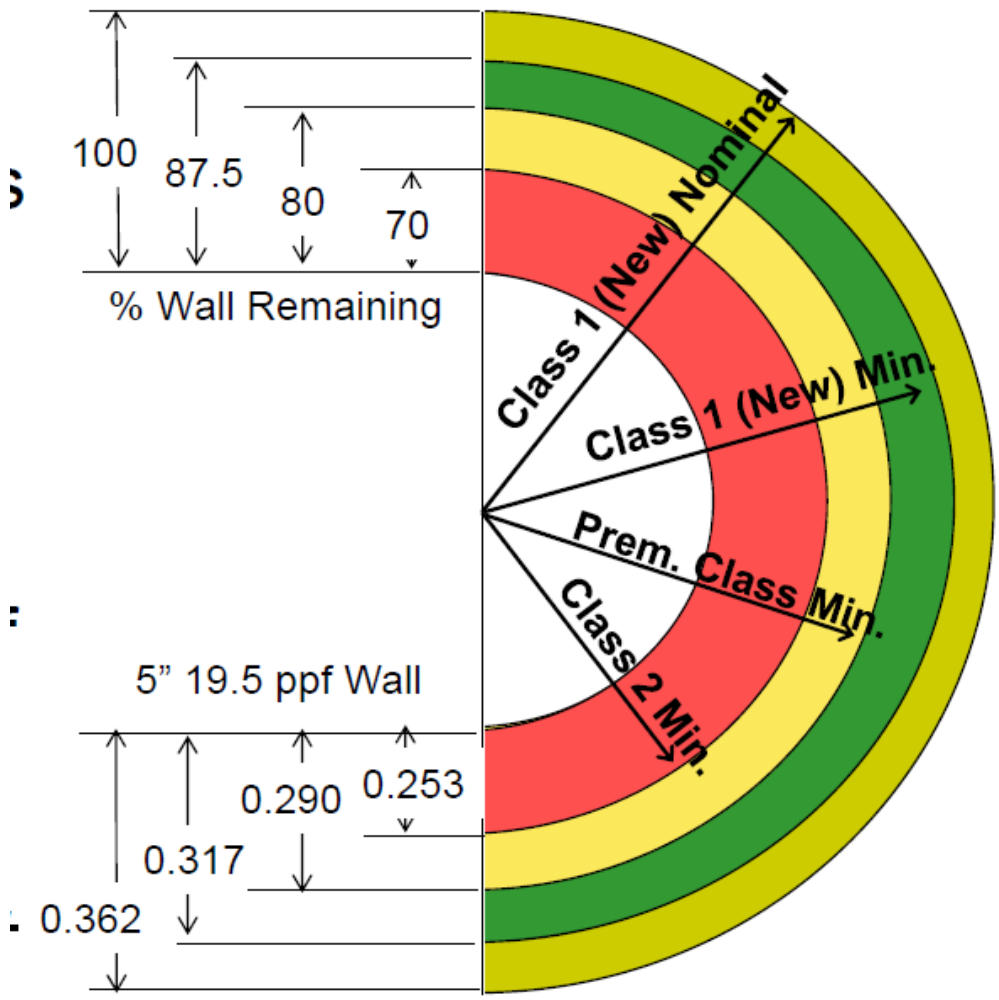

**The upset:** the portion of the drillpipeto which the tool joint is attached and has a thicker walls than the rest of the drillpipe to provide for a stronger joint

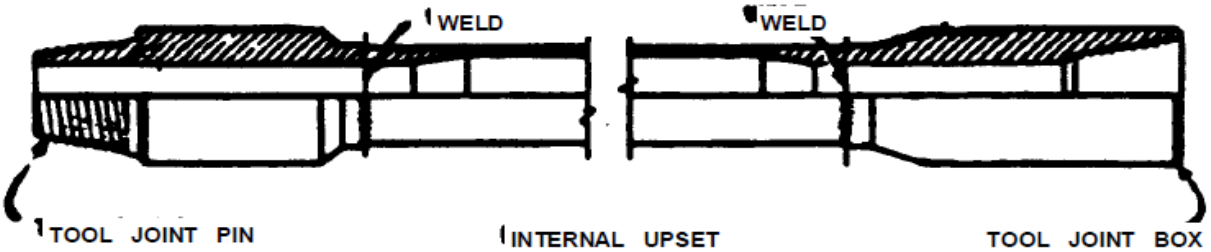


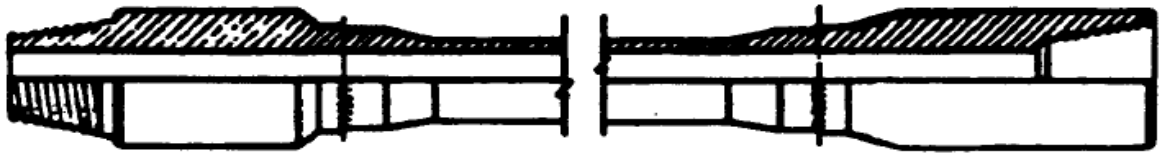

EXTERNAL UPSET

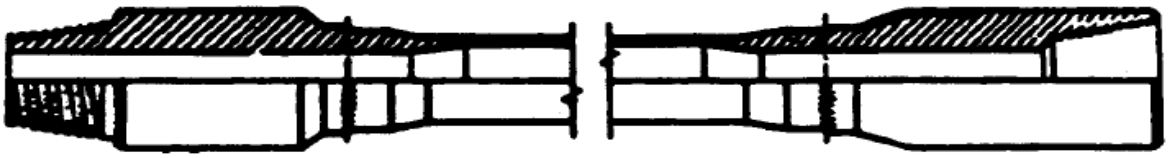

INTERNAL-EXTERNAL UPSET

## F-TOOL JOINTS:

A drillpipe joint is an assembly of three components: drillpipe with plain-ends and a tool joint at each end. One tool joint acts as the pin and the other acts as the box. Drillpipes are connected together by applying a certain calculated torque which depends on the size of the pipe and its grade. All API tool joints have a minimum yield strength of 120,000 psi regardless of the grade of the drillpipe they are used on (E, X, G, S). The length of each joint must be calculated carefully and recorded to allow a determination of total well depth (TD) during drilling operation. A tungsten crbide hard facing sometimes is manufactured on the outer surface of the tool joint box to reduce the abrasive wear of the tool joint by the borehole walls when the drillstring is rotated.

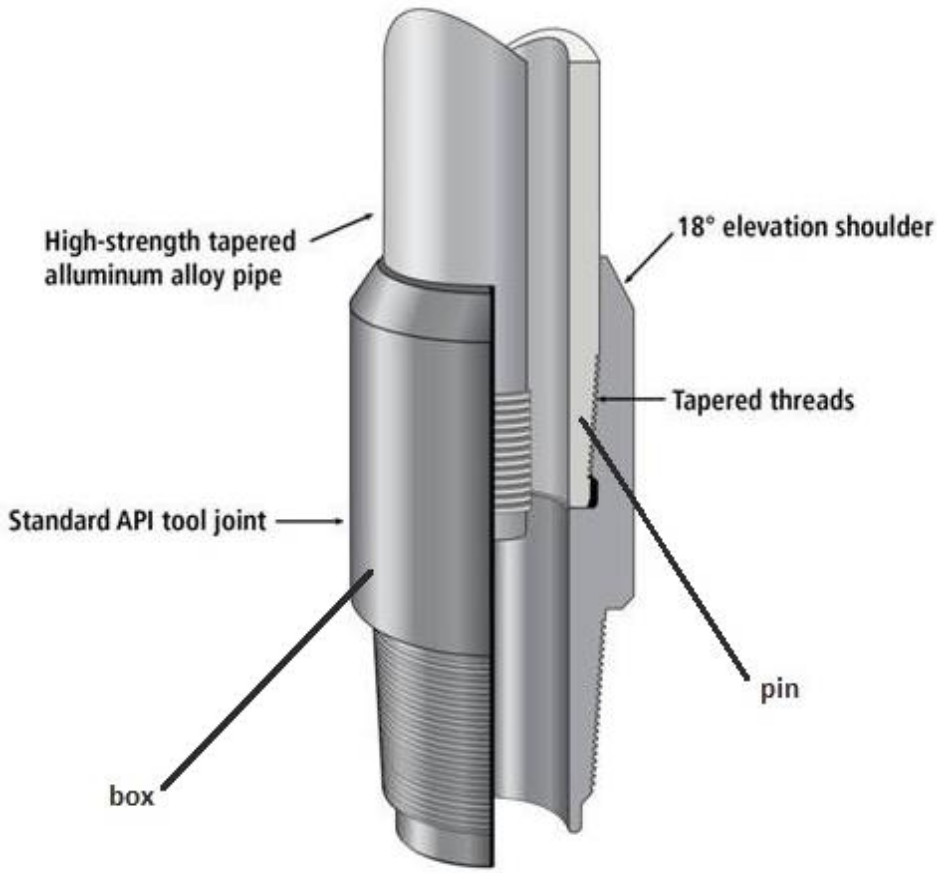


## WASHOUTS IN DRILLSTRINGS:

Tool joint failure is one of the main causes of fishing jobs in the drilling industry. This failure is due entirely to the tool joint threads not holding or not being made properly. The make up torque puts the pin in tension and the box in compression, see **Figure below**. If the pin and box are not properly torqued, then the seals may separate under downhole conditions allowing the a leak path for the mud.

Each drillpipe joint has a pin and a box. Hence for a length of 1000 ft of drillstring there are 66 separate pins and boxes that need to mad up and broken regularly. The threads of the tooljoints seal at the shoulder area only. This feature requires that enough torque is applied during make-up to reduce the risk of having a loose connection in the drillstring. Leak paths within the tool joints develop if the seal is broken or if improper torque is applied. The leak path will lead to tool joint erosion by the drilling mud and if this erosion is severe enough that causes the surface of the pipe to be broken, the pipe is said to have a "washout".

Washouts can also develop due to cracks developing within the drillpipe due to severe drilling vibrations or cyclic loading, Figure below This is especially true in drillstrings rotating at RPM's matching the drillstring natural (harmonic) frequencies. Washouts are usually detected by a decrease in the standpipe pressure, between 100-300 psi over 5-15 minutes. This is easily

Figure 10.5 Make Up Torque, After Ref 4

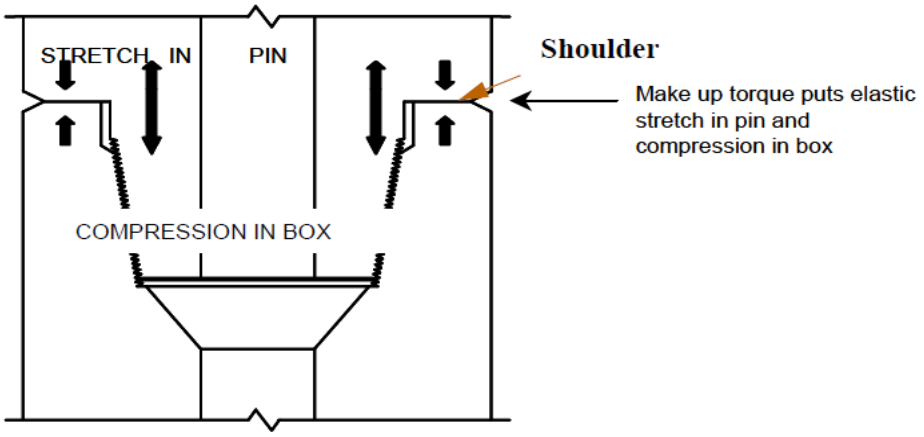


distinguished from sudden drops in pump pressure which could be due to a lost jet nozzle or some surface leak. If a decrease in pump pressure is seen at surface, drilling should stop, pumping resumed. If the pump pressure is still less than before and a bit jet is not suspected to have been lost or no surface leaks detected, then the drillstring should be pulled out of a hole and the defective drillpipe joint should be replaced. Drilling records show that in some cases when a washout is suspected and the pipe was POH (pull out of hole), no cracks or washouts could be visibly seen on any of the drillpipe joints. The reason that the cracks could not been seen at surface is that under pumping and drilling conditions, the cracks open letting mud out and reduce the pump pressure requirements. When at surface, however, the drillpipe is under zero tension and the cracks therefore close escaping detection by the observer on the rig floor. The author has come across several such situations when a washout is detected and when the drillstring POH, no defective pipe is seen. When the drillstring is re-run in hole, the pump pressure was still lower than before and in some cases it continued to drop. If drilling was resumed a twist off usually occurs resulting in a fishing job. To overcome this, it has been found useful in practice to pump a soft plastic line prior to POH. The soft line wedges itself into the crack(s) while the pipe is still down hole and whilst pumping, **Figure below** When the pipe is POH to surface, the defective drillpipe joint is easily noticed by the presence of the soft plastic line in the cracks.



Figure 10.7 Washouts

## G-HEAVY WEIGHT DRILLPIPE:

Heavy weight drill pipe has a “center upset”. The HWDP has the same OD as a standard drillpipe but with much reduced inside diameter (usually 3"), also known as wear pad, that increases tube life by protecting the tube from wearing on the outer diameter by keeping the tube away from the hole wall and acts as a stabilizer thereby increasing the overall stiffness of the drillstring. The HWDP can be distinguished from standard drillpipe by this wear pad. It also reduces hole drag and differential sticking problems. The walls of heavy weight drill pipe are thicker and have longer upsets compared to conventional drill pipe, as well as being stronger with high tensile strength.

**Application:**

Heavy weight drill pipe (HWDP) is usually run in between the drill collars and the drill pipe in order to prevent fatigue of the drill pipe in the vertical drilling industry. Heavy weight drill pipe is also utilized in the horizontal directional drilling (HDD) industry for added strength in high stress situations. Heavy weight drill pipe (HWDP) may be used to make the transition between the drill collars and drill pipe. The function of the HWDP is to provide a flexible transition between the drill collars and the drill pipe. (HWDP) is used to provide part or all of the weight on bit while drilling.

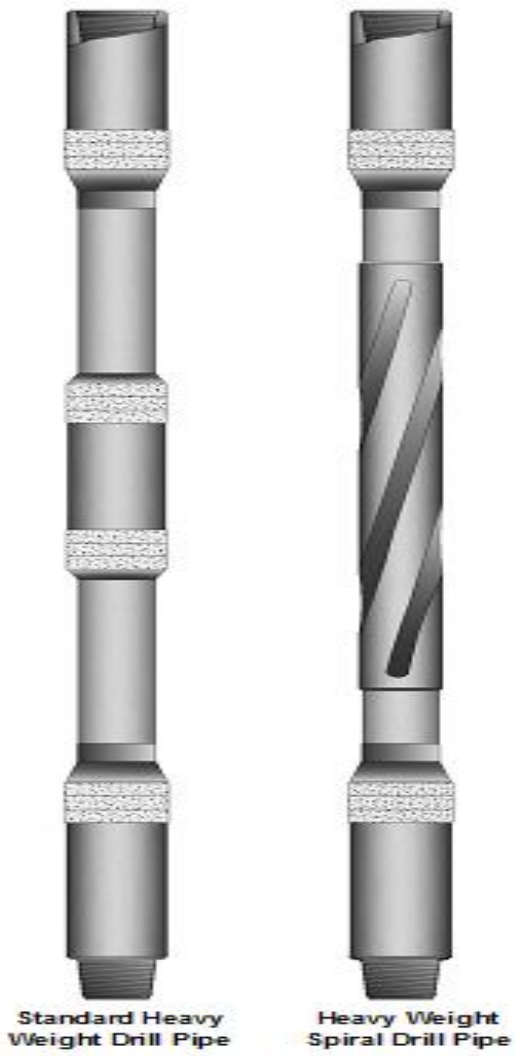

## G- BOTTOM HOLE ASSEMBLY (BHA):

is a component of a drilling rig. It is the lower part of the drill string, extending from the bit to the drill pipe. The assembly can consist of drill collars, subs such as stabilizers, reamers, shocks, hole-openers, and the bit sub and bit. The BHA is used to help the drilling process; the proper selection of the right BHA would go a long way in ensuring high ROP and thus help drill quickly and efficiently. This would lead to lowered drilling costs.

## DRILL COLLAR:

a heavy, thick -walled tube, usually steel, used between the drill pipe and the bit in the drill stem, used to stiffen the drilling assembly an put weight on the bit so that the bit can drill. machined from solid bars of steel, usually plain carbon steel but sometimes of nonmagnetic nickel-copper alloy or other nonmagnetic premium alloys. The buckling tendency of relatively thin-walled drillpipe is too great to use for this purpose.

Drill collars are the predominant component of the bottom hoe assembly (BHA). Both slick and spiral drill collars are used. In areas where differential sticking is a possibility spiral drill collars and spiral heavy-walled drillpipe (HWDP) should be used in order to minimize contact area with the formation.

The drill collars are the first section of the drillstring to be designed. The length and size of the collars will affect the grade, weight and dimensions of the drill pipe to be used. **Table below** illustrates typical sizes of collars to be run in each hole section. Drill collar selection is usually based on buckling considerations in the lower sections of the string when weight is set on the bit.



**Table 10.3 Drillcollars And Hole Sizes**

| Hole Section | Recommended Drill Collar OD (ins) |
|---|---|
| 36 | 9½ + 8 |
| 26 | 9½ + 8 |
| 17½ | 9½ + 8 |
| 16 | 9½ + 8 |
| 12¼ | 8 |
| 8½ | 6¼ |
| 6 | 4¾ |

## Drill collar profiles:

### 1-Slick Drill Collars:

As the name implies, slick drillcollars have the same nominal outside diameter over the total length of the joint, These drill collars usually have the following profiles:

- a slip recess for safety, and
- an elevator recess for lifting.

### 2-Spiral Drill Collars:

Spiral drill collars are used primarily to reduce the risk of differential sticking. The spirals reduce the weight of the collar by only 4 -7% but can reduce the contact area (proportional to sticking force) by as much as 50%.

### 3-Square Drill Collars:

These are used in special drilling situations to reduce deviation in crooked hole formations. They are used primarily due to their rigidity.

## STABILISERS:

Stabilisers are tools placed above the drill bit and along the bottom hole assembly (BHA) to control hole deviation, dogleg severity and prevent differential sticking. They achieve these functions by centralizing and providing extra stiffness to the BHA. Improved bit performance is another beneficiary of good stabilization.

There are basically two type of stabilisers:

- Rotating stabilisers
- Non-rotating stabilizers

**A-Rotating stabilizers:**

include: integral blade stabilizer, sleeve stabilizer and welded blade stabilizer. Integral blade stabilizers (Figure below, first four pictures on left) are machined from a solid piece of high strength steel alloy. The blade faces are dressed with sintered tungsten carbide inserts. The blades can either be straight or spiral.

**B-Non-rotating stabilizers:**

comprise a rubber sleeve and a mandrel (picture on right of Figure below). The sleeve is designed to remain stationary while the mandrel and the drillstring are rotating. This type is used to prevent reaming of the hole walls during drilling operation and to protect the drill collars from wall contact wear.



Figure 10.12 Types of Stabiliser,Courtesy of Weatherford

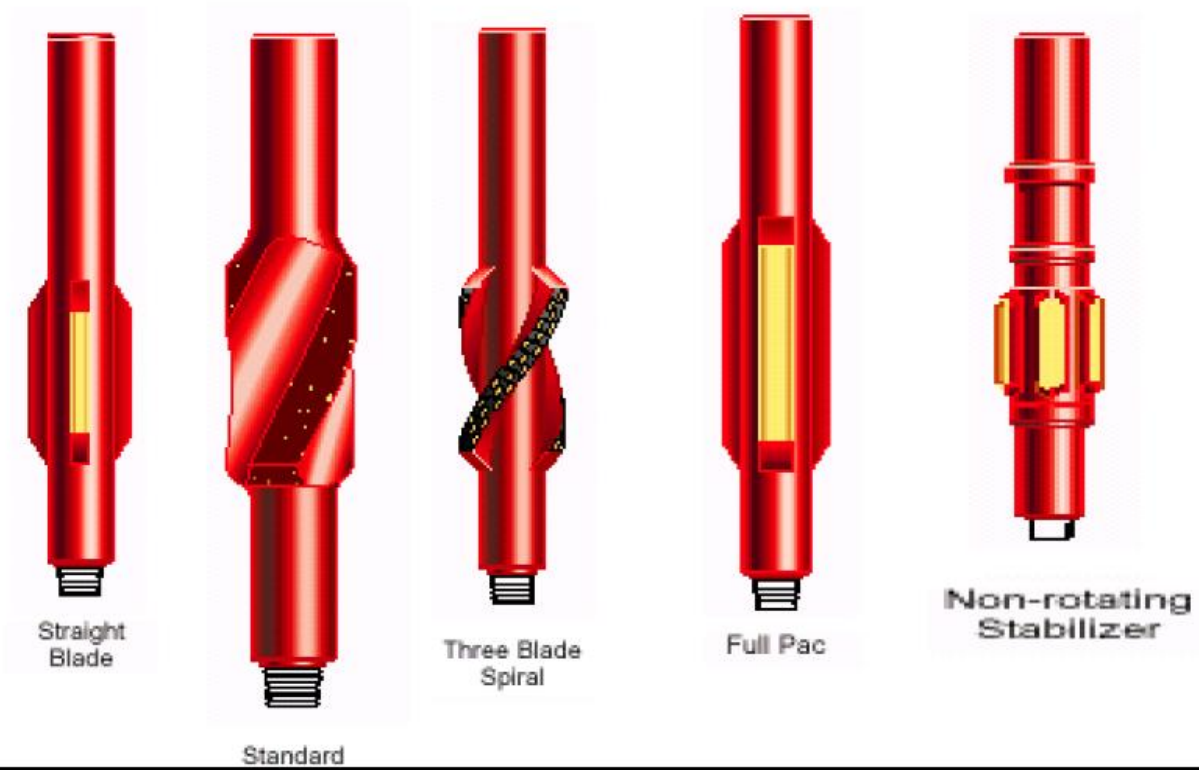


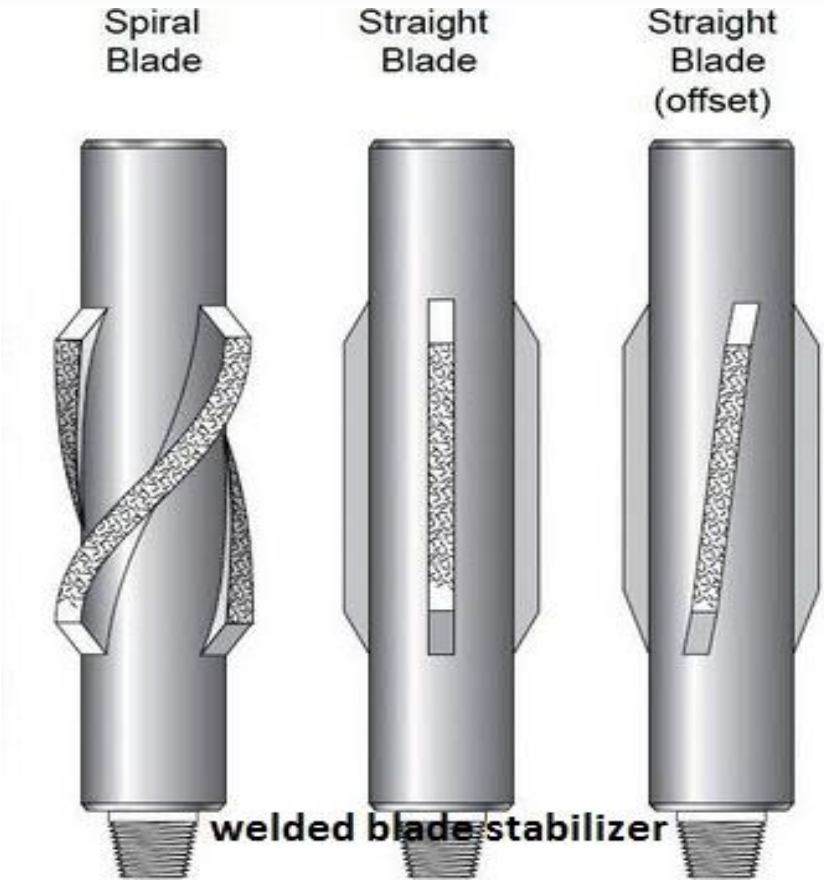


## NON STANDARD BHA EQUIPMENTS:

### ROLLER REAMERS:

Roller reamers (Figure below) are used to replace near bit and string stabilizers in bottom hole assemblies where high torque and swelling or abrasive formations are encountered. Roller reamers can have either 3 or 6 cutter sets. Both near bit and string reamers are available. Consideration should be given to replacing the near bit and first string stabilizer with a roller reamer if high torque or severe gauge wear of stabilizers has been encountered.

The standard configuration is to replace the near bit and first string stabilizer with a three point roller reamer. For severely abrasive formations or wear significant high torque is encountered a six point roller reamer may be used in place of the near bit stabilizer.

Sealed bearing roller reamers should always be used in preference to non-sealed bearing reamers. The use of sealed bearings ensures the risk of dropping a cutter block set from the reamer is minimized. Cutter block sets are available in hard-faced steel or dressed with tungsten carbide. The selection of the appropriate block set will depend upon the formation drilled, however the block set should always be sufficiently hard to avoid wear to the gauge and thus ensure ptimum directional control.

**Figure 10.13 Roller Reamers And Cutters, Courtesy of Weatherford**

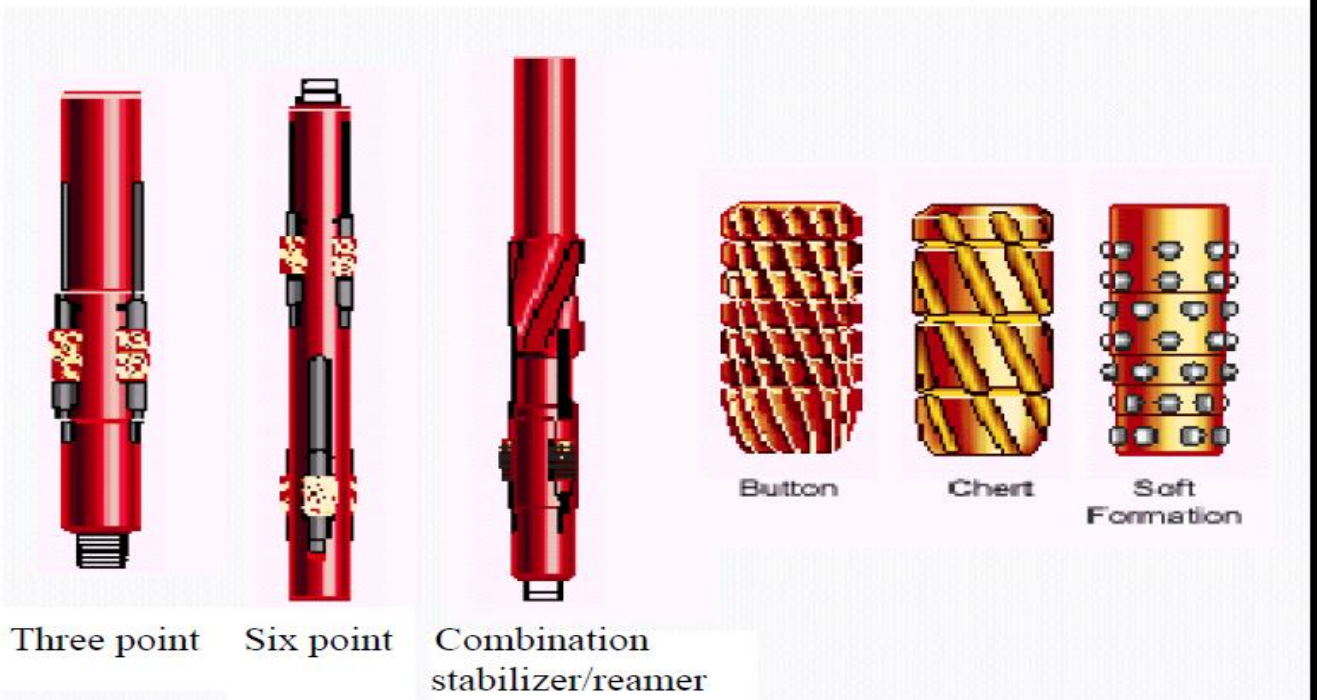



sealed bearing roller reamer

# DRILLING BITS:

## 1-ROLLER CONE BITS:

As the name implies, roller cone bits are made up of (usually) three equal-sized cones and three identical legs which are attached together with a pin connection. Each cone is mounted on bearings which run on a pin that forms an integral part of the bit leg. The three legs are welded together and form the cylindrical section which is threaded to make a pin connection. The pin connection provides a means of attachment to the drill string Each leg is provided with an opening for fluid circulation. The size of this opening can be reduced by adding nozzles of different sizes. Nozzles are used to provide constriction in order to obtain high jetting velocities necessary for efficient bit and hole cleaning. Mud pumped through the drillstring passes through the bit pin bore and through the three nozzles, with each nozzle accommodating one third of the total flow, if all the nozzles were of the same size.

There are two types of roller cone bits:

**Milled tooth bits**: Here the cutting structure is milled from the steel making up the cone

**Insert bits**: The cutting structure is a series of inserts pressed into the cones.

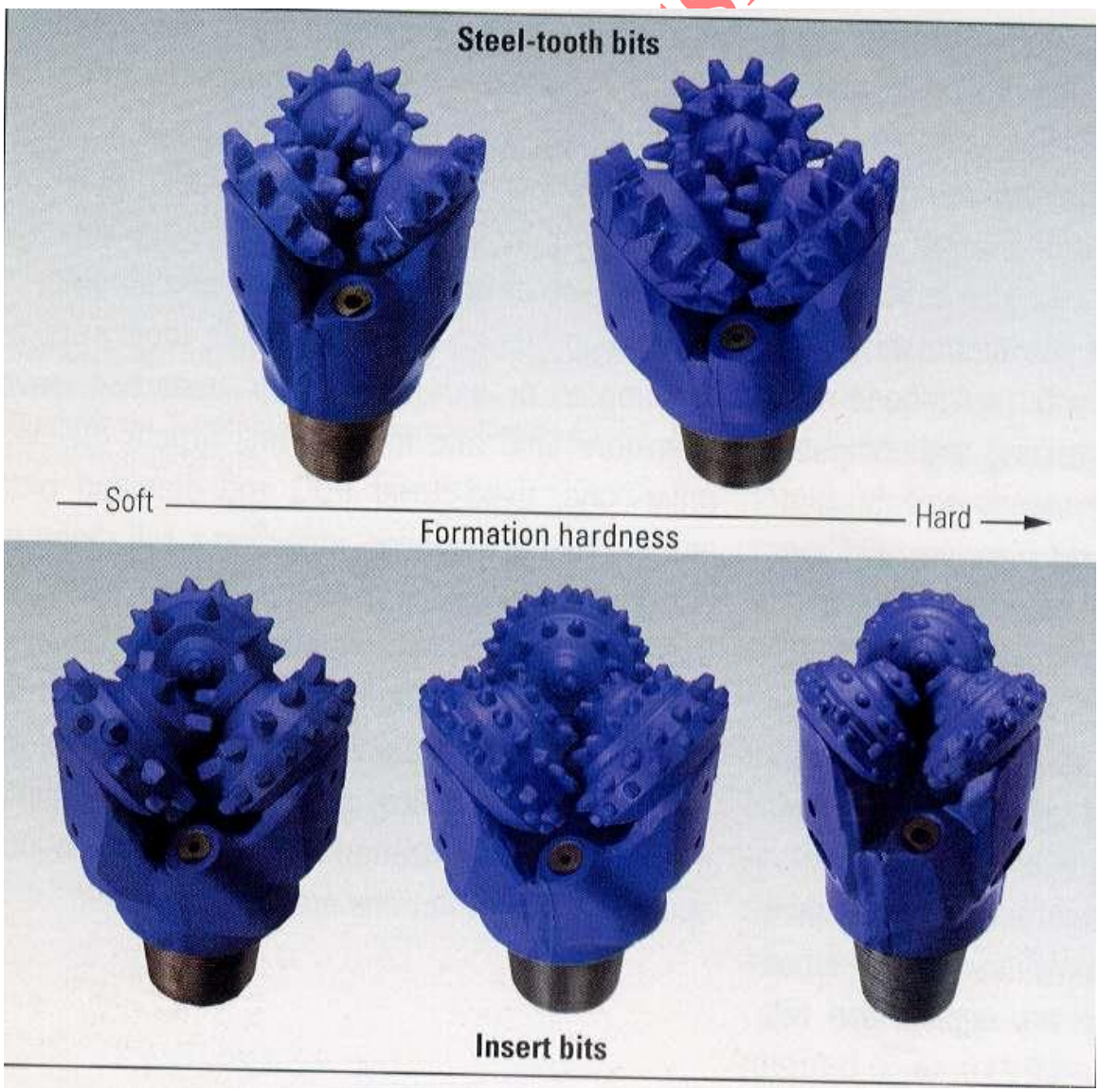

## DESIGN FACTORS

The drill bit design is dictated by the type of rock to be drilled and size of hole. The three legs and journals are identical, but the shape and distribution of cutters on the three cones differ. The design should ensure that the three legs must be equally loaded during drilling. The following factors are considered when designing an manufacturing a three-cone bit:

1-Journal angle.
2-Cone profile.
3-Offset between cones.
4-Teeth.
5-Bearings.

**1-Journal angle:** The bit journal is the bearing load-carrying surface. The journal angle is defined as the angle formed by a line perpendicular to the axis of the journal and the axis of the bit, The magnitude of the journal angle directly affects the size of the cone; the size of the cone decreases as the journal angle increases. The journal angle also determines how much WOB the drill bit can sustain; the larger the angle the greater the WOB. The smaller the journal angle the greater is the gouging and scraping actions produced by the three cones. The optimum journal angles for soft and hard roller cone bits are 33 degrees and 36 degrees, respectively.

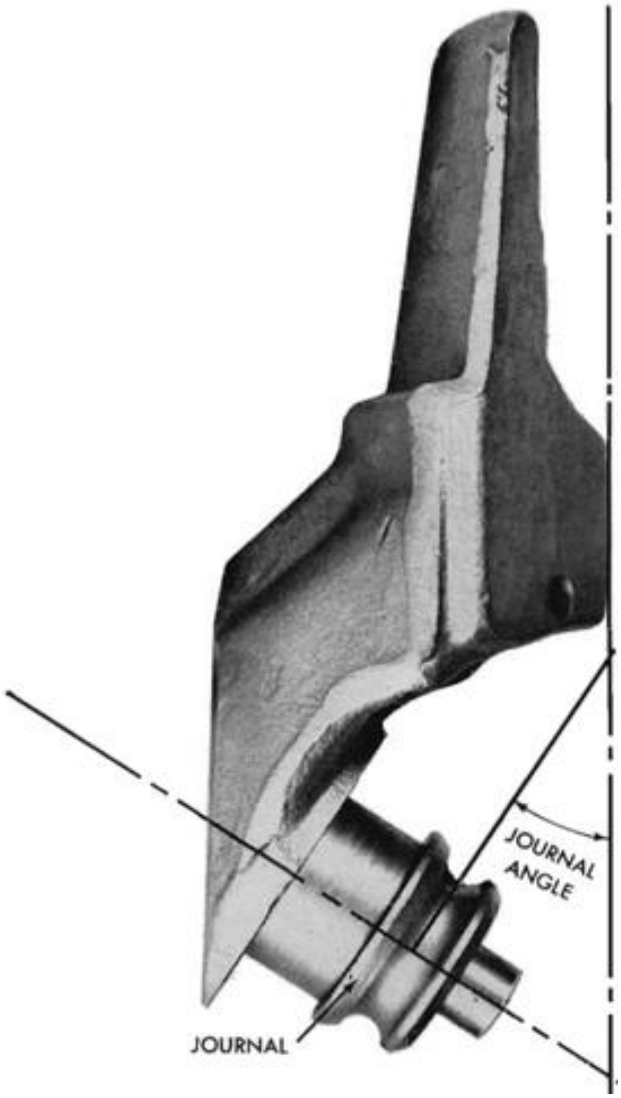

## 2 CONE PROFILE

The cone profile determines the durability of the drillbit. Cones with flatter profile are more durable but give lower ROP, whilst a rounded profile delivers a faster ROP but is less durable.

**3-CONE OFFSET:** The degree of cone offset (or skew angle) is defined as the horizontal distance between the axis of the bit and a vertical plane through the axis of the journal. A drill bit with zero offset has the centre lines of the three cones meeting at the centre of the drillbit**.** Skew angle is an angular measure of cone offset. The amount of offset is directly related to the strength of rock being drilled. Soft rocks require a higher offset to produce greater scraping and gouging actions. Hard rocks require less offset as rock breakage is dependent on crushing and chipping actions rather than gouging,. Cone offset increases ROP but also increases tooth wear, especially in the gauge area, and increases the risk of tooth breakage.

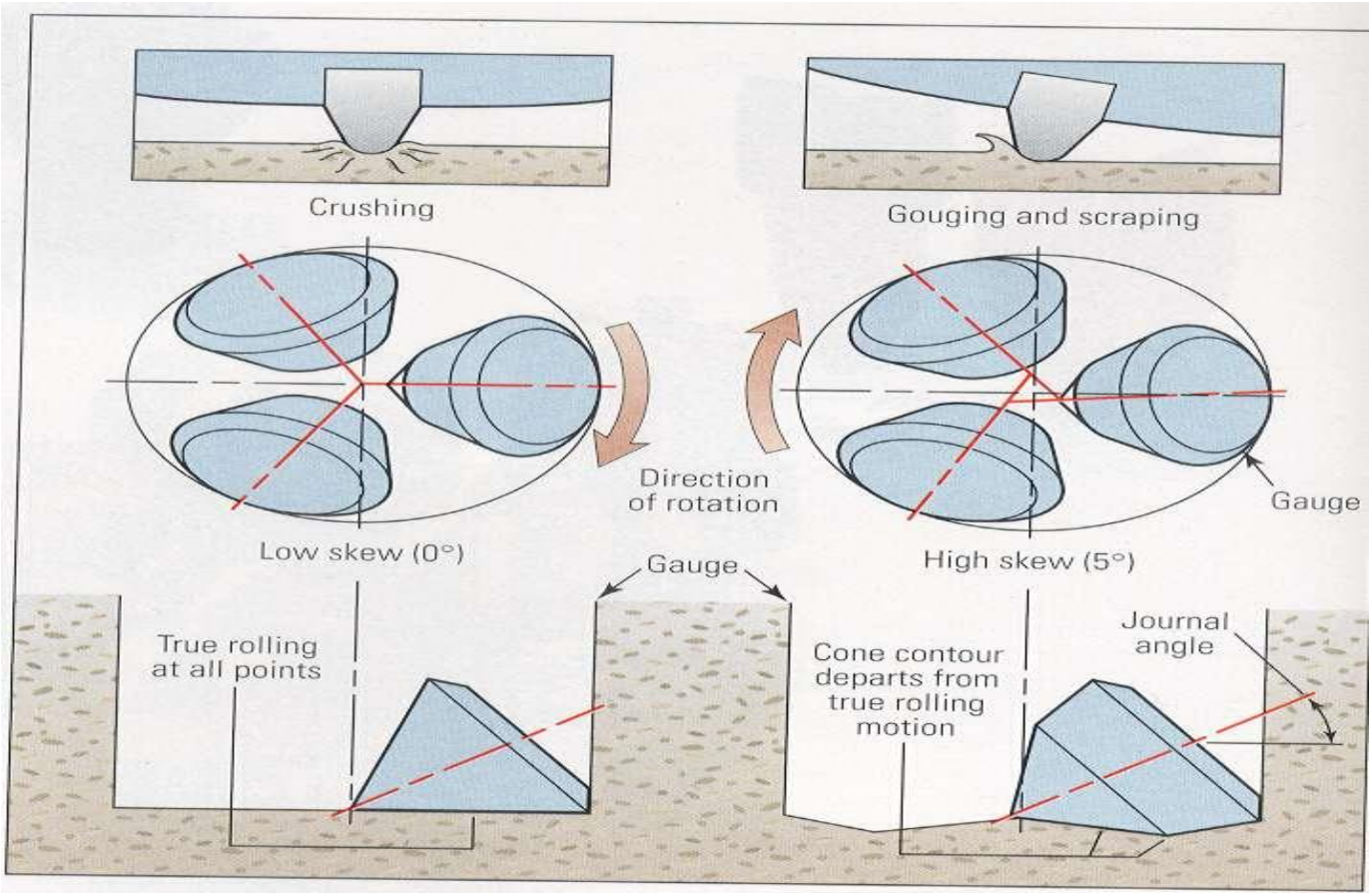


## 4-TOOTH NUMBER AND SPACING

A soft rock requires long and a few teeth allowing the WOB to be distributed over fewer teeth. The teeth are widely spaced to reduce the risk of the bit being balled up when drilling water sensitive clays and shales. Wider spacing also allows the rows of teeth from one cone to engage into the space of equivalent row of the adjacent cone and thereby help to self clean the cutting structure of any build up of drilled cuttings. For hard formations, the teeth are made shorter, heavier and more closely spaced to withstand the high compressive loads required to break the rock.

**5-INSERT SHAPE**

For soft formation bits, the inserts have chisel shapes to provide aggressive drilling action. In soft, poorly consolidated formations the chisel shape is more efficient at penetrating the formation than a more rounded conical shape.

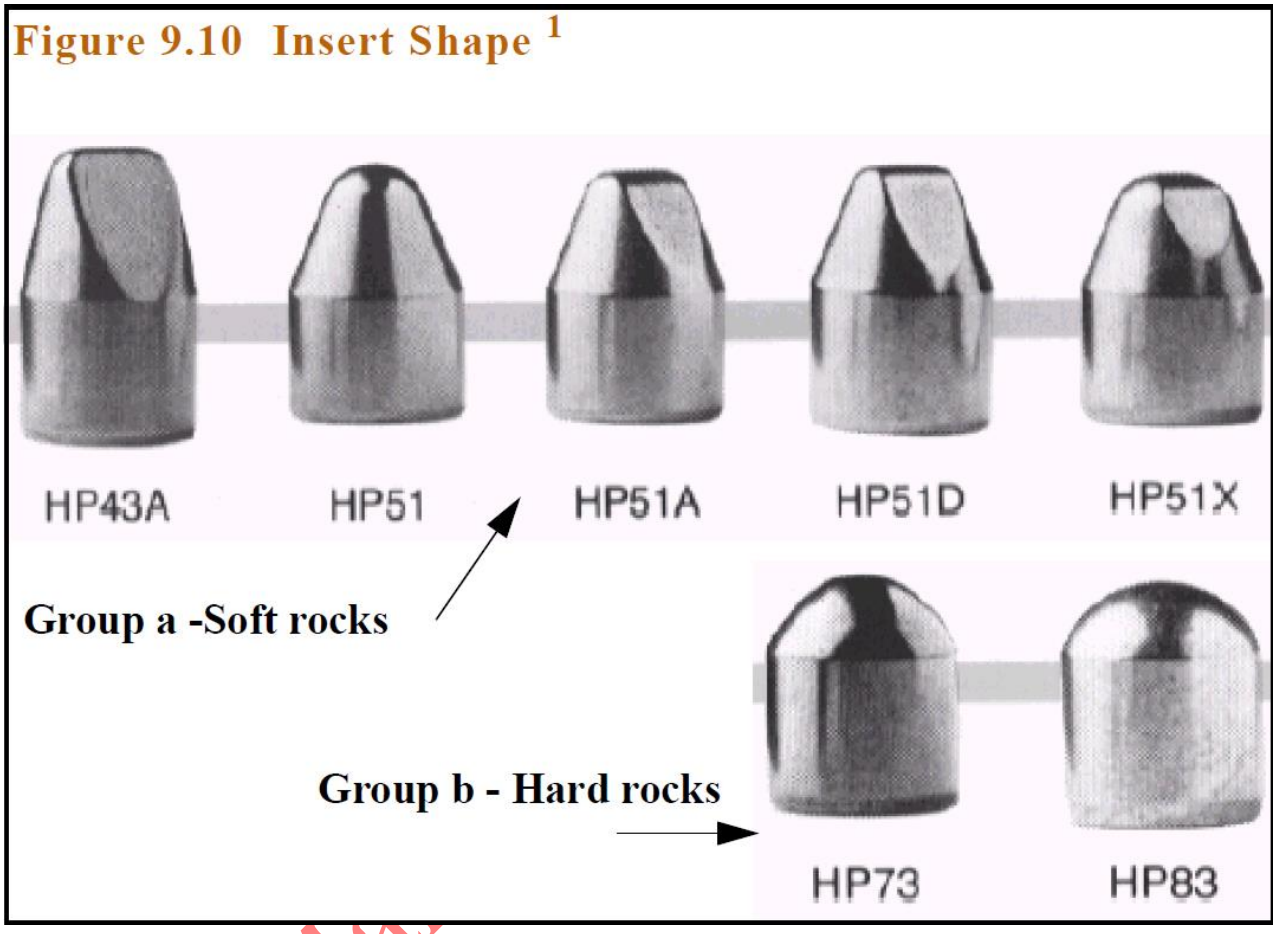

Figure 9.10 Insert Shape [1]

**6-BEARINGS :**

Bit bearings are used to perform the following functions:

- support radial loads
- support thrust or axial loads
- secure the cones on the legs

The bearings must take the loads generated as the bit cutting structure (and gauge area) engage with the formation as weight (on bit) is applied. These loads cane be resolved into radial and axial forces.

There are two bearing types, roller and friction (or journal). Roller bearings may be sealed or unsealed whilst friction bearings are always sealed. In roller bearings, the loads applied to the cutting structure is transmitted to the journal through a series of rollers.
There may be one, two or three of these roller races depending upon the size of the bit.
The main feature of the friction or journal bearing that distinguishes it from roller bearings is that the load placed on the cutting structure is transmitted directly to the journal over a wide surface area, hence the name. Friction bearing journal experiences a

more even. Small diameter friction bearing bits can handle relatively high rpm without suffering the damaging high temperatures that would occur with the same rpm on a larger diameter friction bearing bit.Because of the above, roller bearings 1 are the common bearing down to 12 ¼" diameter and friction bearings are the standard up to this size; 12 ¼" is the cross -over from friction to roller.

Bearing life is affected by:

• heavy reaming which reduces bearing life.
• directional effects which produce high side loadings.
• severe Drillstring and bit vibrations.

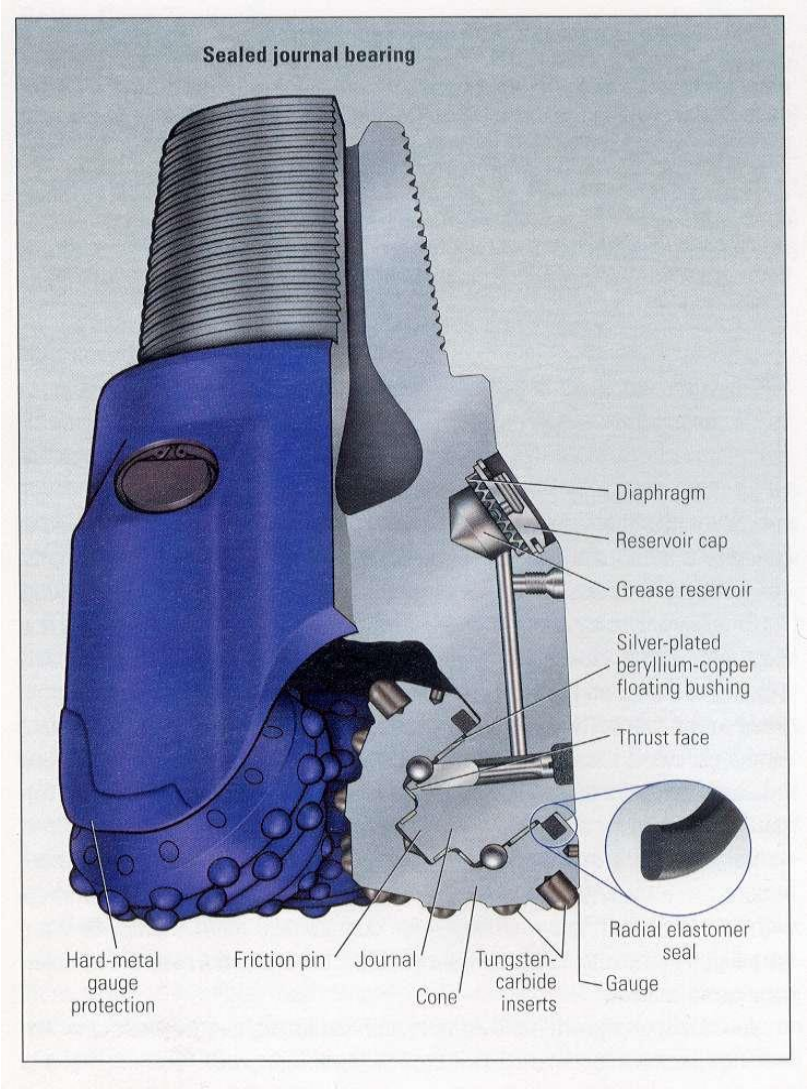


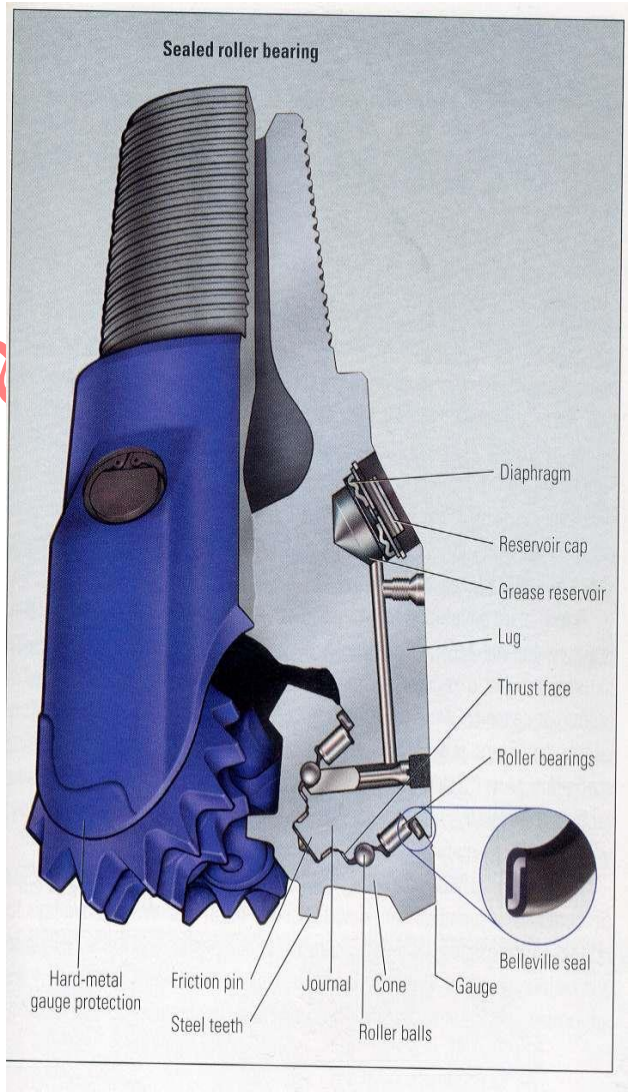


## 2- POLYCRYSTALLINE DIAMOND COMPACT (PDC) BIT:

A polycrystalline diamond compact (PDC) bit employs no moving parts (i.e. there are no bearings) and is designed to break the rock in shear and not in compression as is done with roller cone bits. Rock breakage by shear requires significantly less energy than in compression, hence less weight on bit can be used resulting in less tear and wear on the rig and drillstring.

A PDC bit employs a large number of cutting elements, each called a PDC cutter. The PDC

cutter is made by bonding a layer of polycrystalline man-made diamond to a cemented tungsten carbide subtrate in a high pressure, high temperature process. The diamond layer is composed of many tiny diamonds which are grown together at random orientation for maximum strength and wear resistance.

**BIT DESIGN ELEMENTS**

There are many details relating to bit design which can not all be covered in detail here. Reference to manufacturers catalogues is recommended for the interested reader.

The PDC design is affected by:

1. Body design: can either be steel-bodied or tungsten carbide (matrix)
2. Cutters Geometry:
   - Cutters
   - Number of Cutters and spacing of cutters
   - Size of Cutters
   - Back Rake
   - Side Rake
3. Geometry of Bit:
   - Number of Blades
   - Blade Depth
4. Diamond table
   - Substrate interface
   - Composition
   - Shape



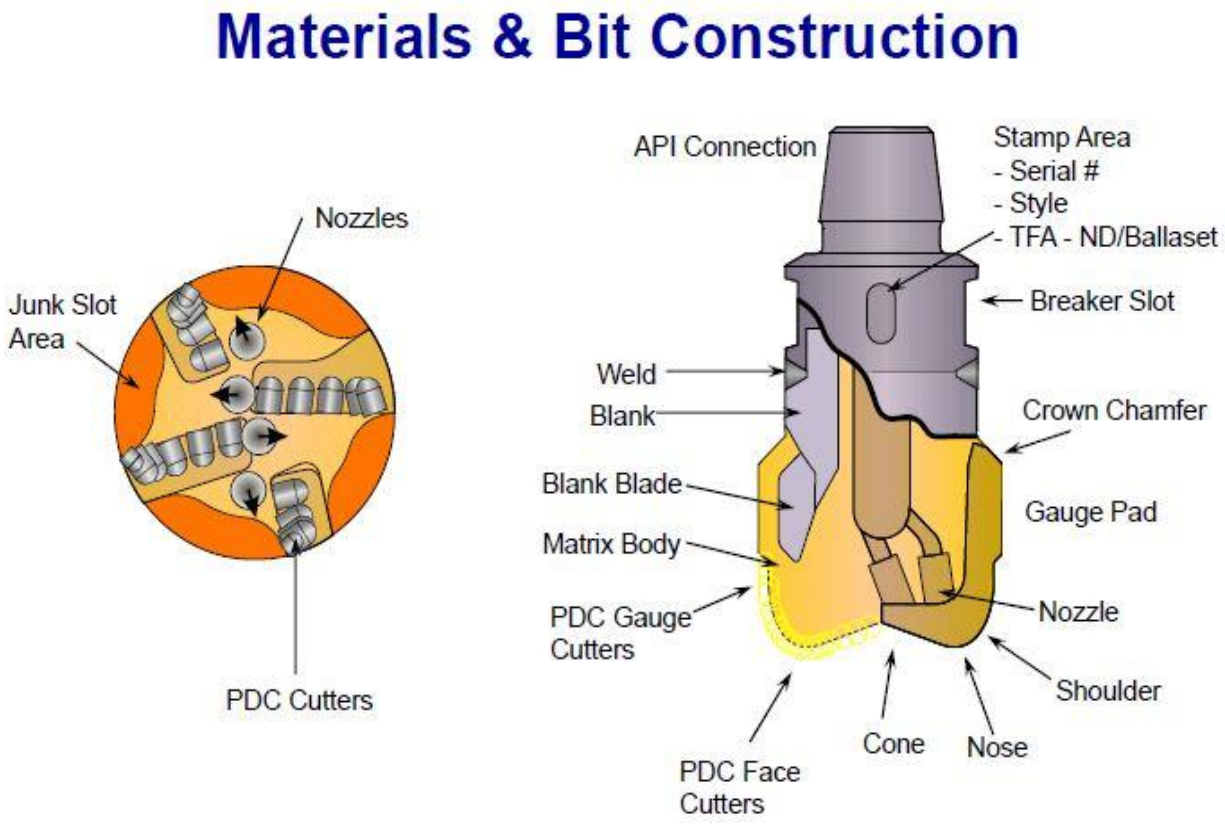

A-**BIT BODY**

The bit body may be forged or milled from steel (steel-bodied bits) or constructed in a cast from tungsten carbide (matrix bit). From a practical standpoint, steel bodies bit are preferable as they can be easily repaired but suffer from erosion. Matrix bits are more resistant to erosion but are prone to bit balling in soft clay formations due to their low blade height compared with steel bodied bits.

B-**CUTTER GEOMETRY**

Cutter geometry depends on:

**1. Number of Cutters**

Soft rocks can be penetrated easily and hence fewer cutters are used on soft PDC bits as each cutter removes a greater depth of cut. More cutters must be added to hard PDC bits for harder formation to compensate for the smaller depth of cut.

**2. Cutter Size**

Large cutters are used on softer formation bits and smaller cutters on the harder formation bits. Usually a range of sizes is used, from 8mm to 19mm is used on any one bit.



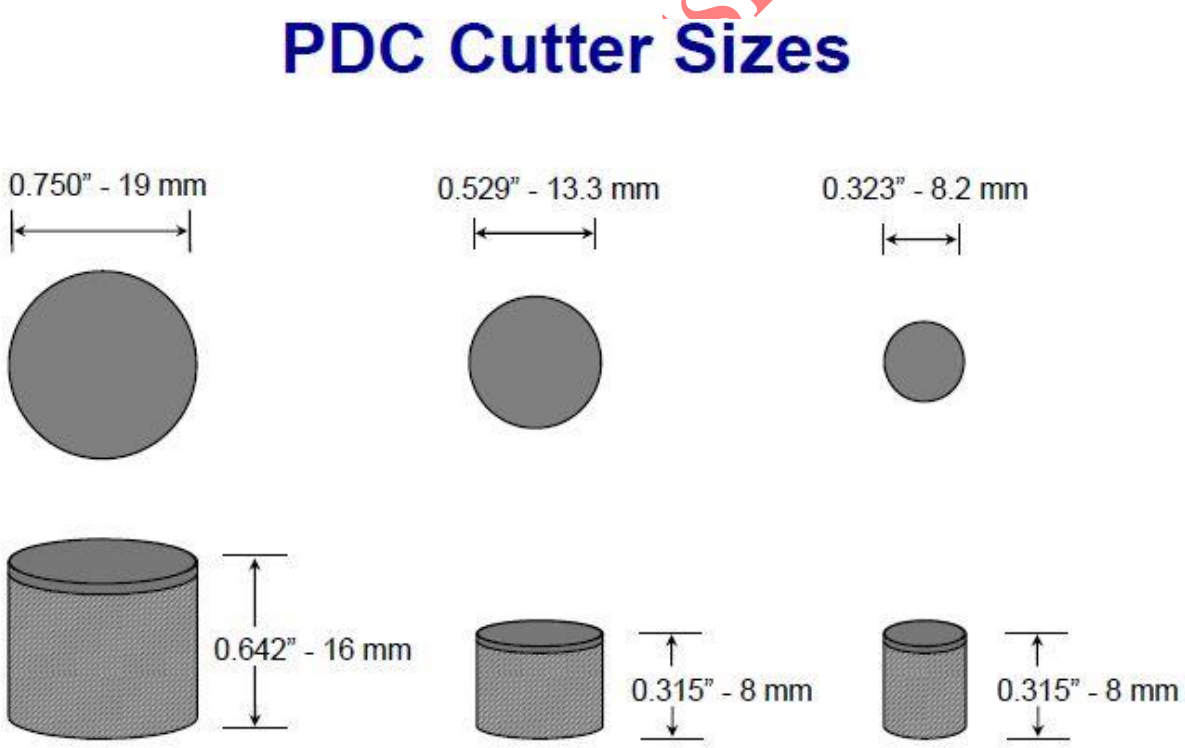


**3. Back Rake**

Cutter orientation is described by back rake and side rake angles.Back rake is the angle presented by the face of the cutter to the formation and is measured from the vertical, see **Figure below**. The magnitude of rake angle affects penetration rate and cutter resistance to wear. As the rake angle increase, ROP decreases but the resistance to wear increases as the applied load is now spread over a much larger area. PDC cutters with small back rakes take large depths of cut and are therefore more aggressive, generate high torque, and are subjected to

accelerated wear and greater risk of impact damage. Cutters with high back rake have the reverse of the above. Back rake angles vary between, typically, 15° to 45°. They are not constant across the bit, nor from bit to bit.

**4. Side Rake**

Side rake is an equivalent measure of the orientation of the cutter from left to right. Side rake angles are usually small. The side rake angle assists hole cleaning by mechanically directing cuttings toward the annulus.

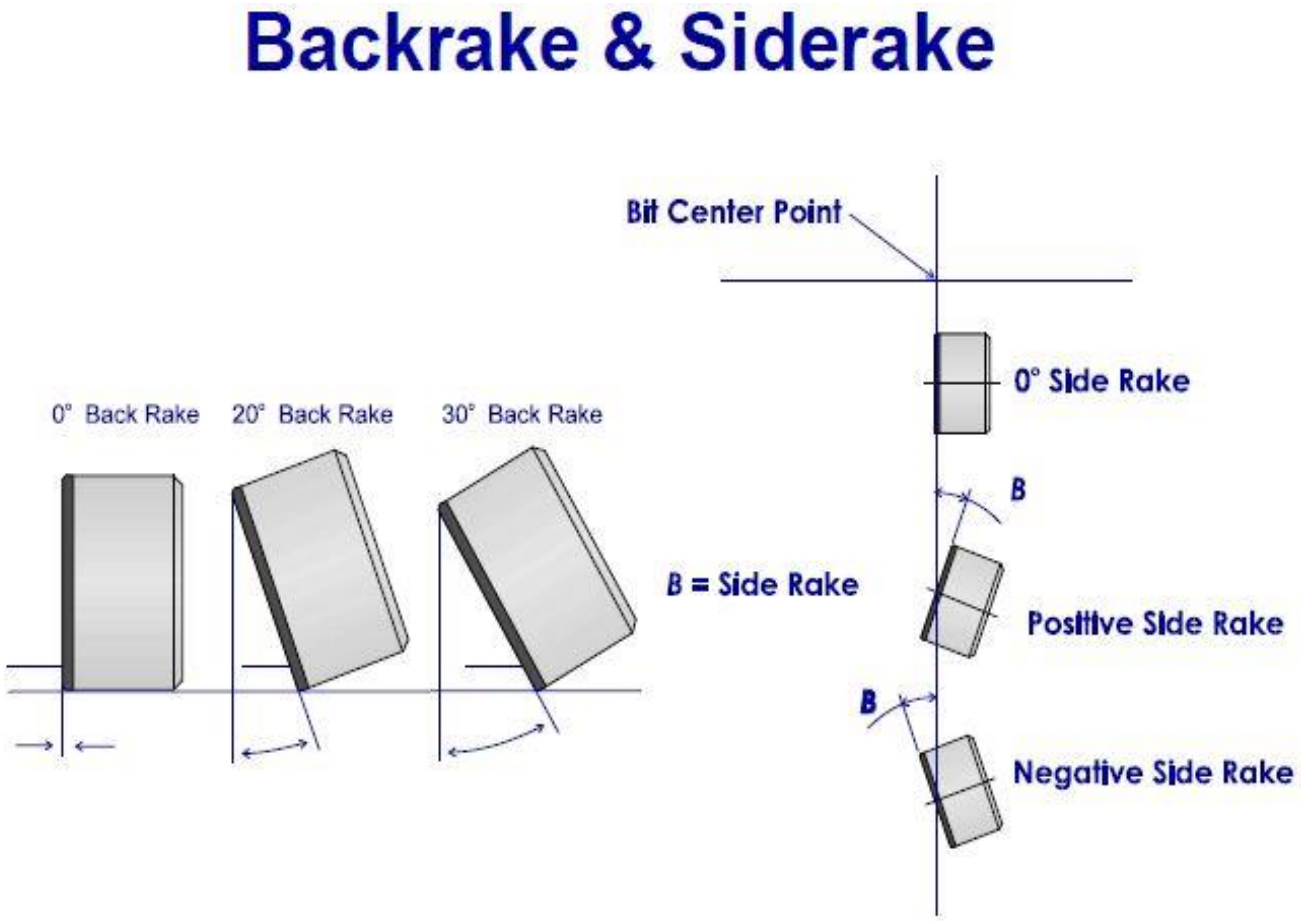

**5. Cutter Shape**

The edge of the cutters may be bevelled or chamfered to reduce the damage caused by impacts.

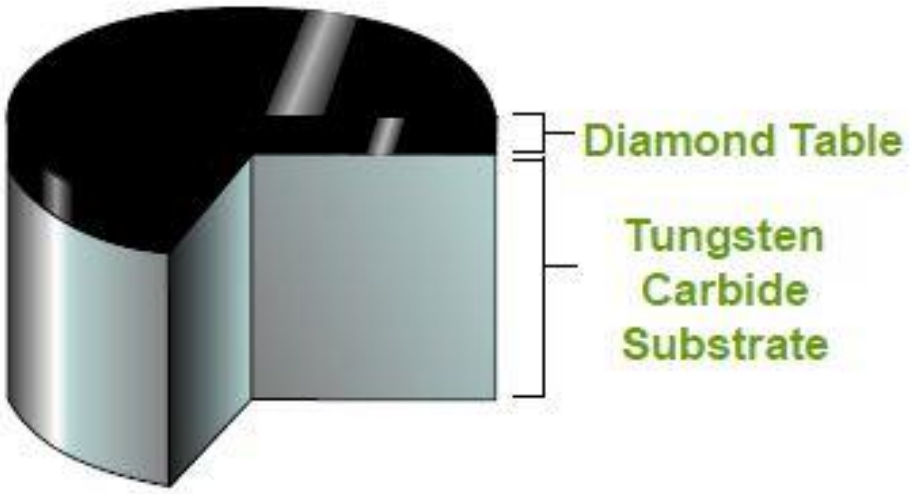


Conventional PDC Cutter

## Fixed Cutter Bit Profiles

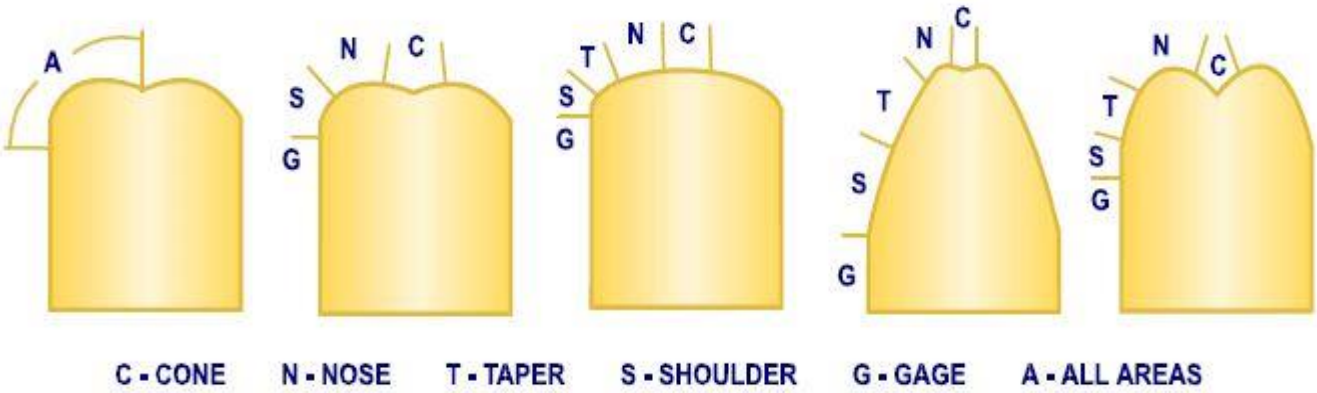


A - All over
C - Cone - shown on all profiles
N - Nose - Part of profile that would rest on the table if bit set upside down
T – Taper – Straight portion tangent to nose and shoulder
S - Shoulder - Outer area adjacent to the nose and gauge areas
G - Gauge - Area ground to API specifications and cuts a “gauge” hole

**B-BIT GEOMETRY**

The factors affecting bit geometry include:

**1.Number of Blades**

Using the same analogy for roller cone bits, a PDC bit designed for soft rocks has a fewer blades (and cutters) than one designed for hard rocks.

The soft formation PDC bit will therefore have a large junk slot area to remove the large volume of cut rock and to reduce bit balling in clay formations, **Figure below a**. A hard PDC bit with many blades requires many small cutters, each cutter removing a small amount of rock, **Figure below b**.

Figure 9.15 PDC bit design features, courtesy of Reed Hycalog

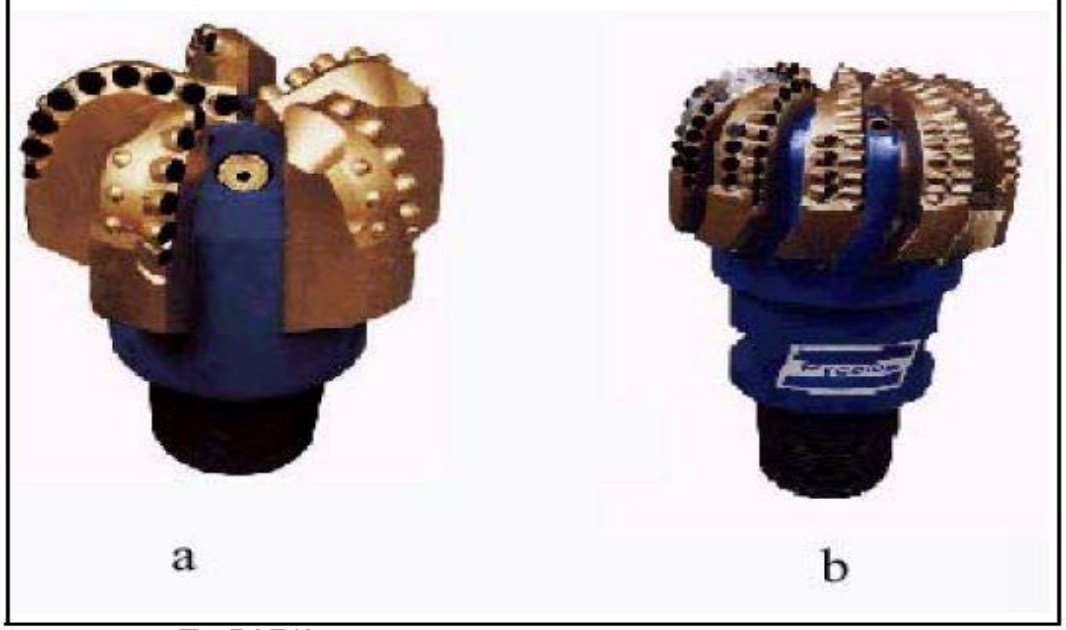


**2.Blade Height**

A soft formation PDC bit will have a lager blade height than a hard PDC bit with a consequent increase in junk slot area. Higher blades can be made in steel bodied- bits than matrix bits, because of the greater strength of steel over that of matrix.

**3.Blade Geometry**

PDC bits can be manufactured with a variety of blade shapes ranging from straight to complex curve shapes. Experience has shown that curved blades provide a greater stability to the bit especially when the bit first contacts the rock.


**4.Bit Profile**

Bit profile affects both cleaning and stability of the bit. The two most widely used profiles are: double cone and shallow cone, **Figure below**. The double cone profile allows more cutters to be placed near the gauge giving better gauge protection and allowing better directional control. The shallow cone profile gives faster penetration but has less area for cleaning. In general a bit with a deep cone will tend to be more stable than a shallow cone.

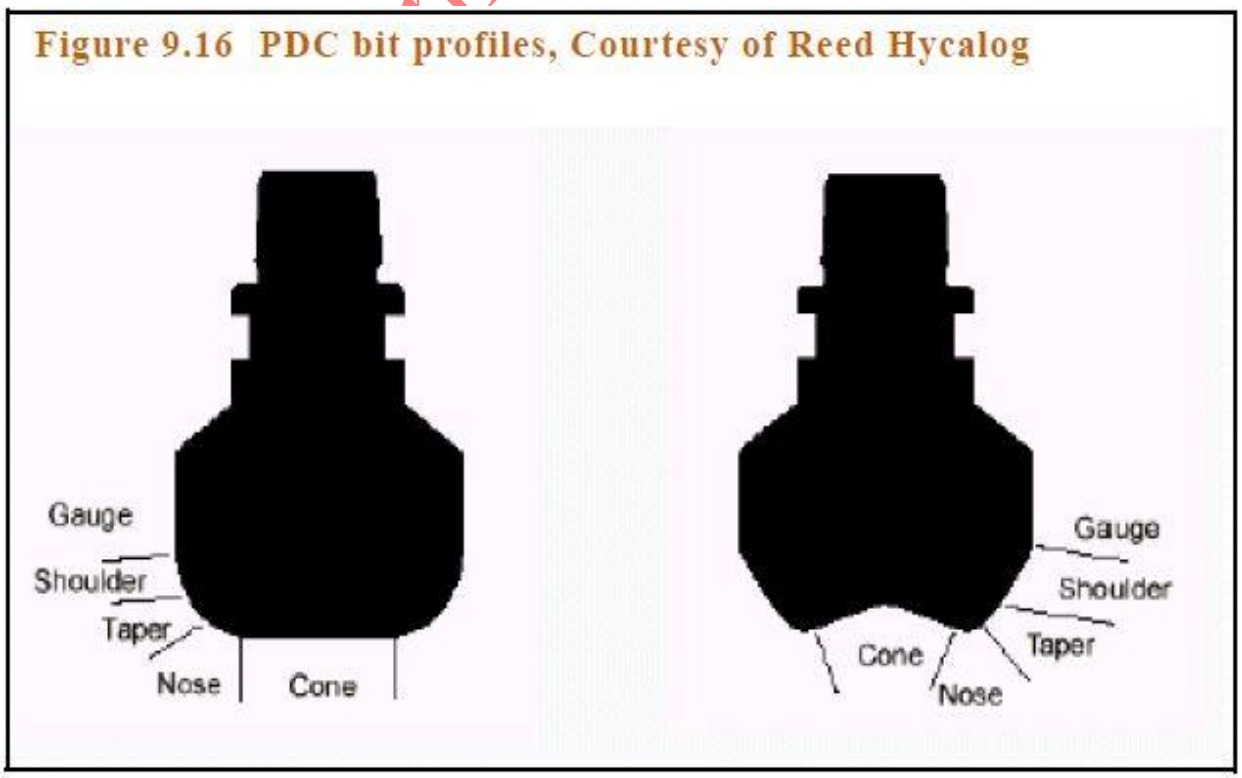

**5.Bit Length**

This is important for steerability. Shorter bits are more steerable. The two bits on the left of **Figure below** are sidetrack bits, with a short, flat profile. The 'Steering Wheel' bit on the right of **Figure below** is designed for general directional work**.**

Figure 9.17 PDC bit length, Courtesy of Reed Hycalog

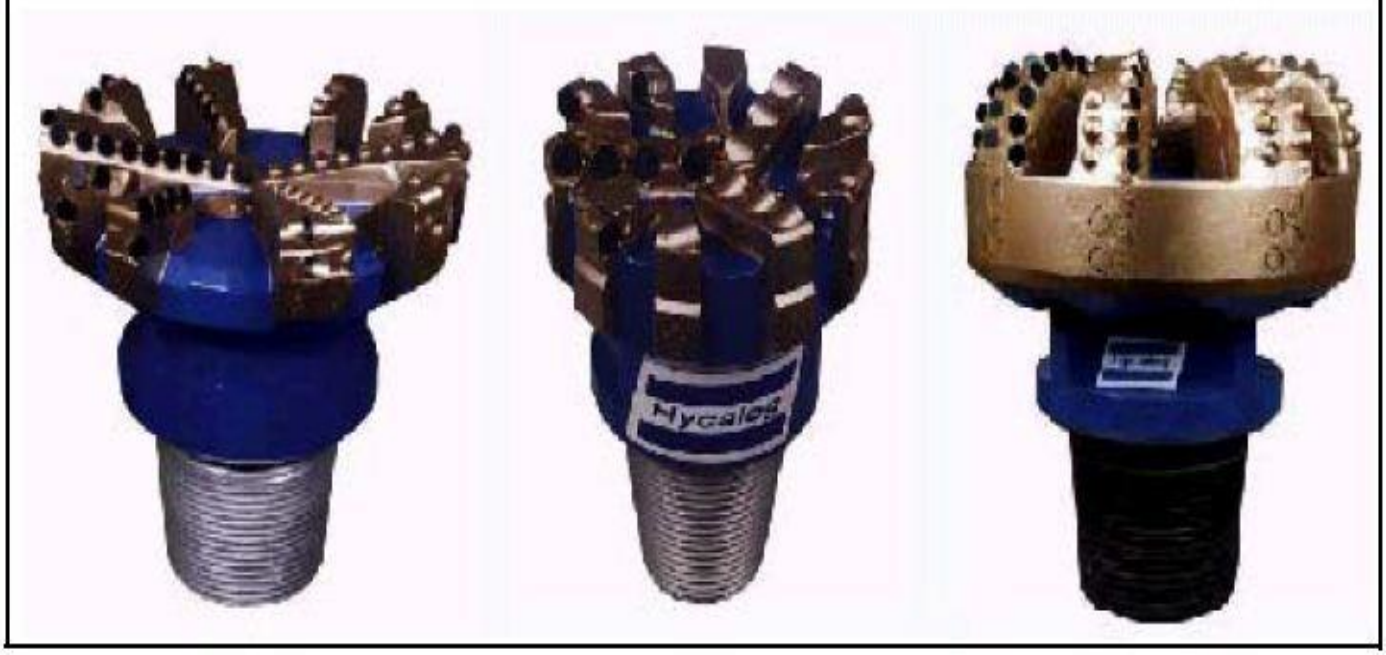




**6.Bit Style**

When all of the above features are put together, a variety of bit styles emerge as shown in **Figure below**. The bit on the extreme left of **Figure below** is a light set bit with a few, high blades and a few but large cutters with small back rake angles. Thus light set bits typically have a few, high blades, with few large cutters, probably with low back. For hard rocks, PDC bits will have more blades, with smaller and more numerous cutters, and this trend continues to the heavy set bits on the extreme right of **Figure below.**

**6. Gauge Protection**

As discussed before, the greatest amount of work is done on the heel and gauge of the drillbit. A PDC bit that wears more on the gauge area will leave an undergauge hole which will require reaming from the next bit. Reaming is time consuming and costly and in some cases can actually destroy an entire bit without a single foot being drilled. Hence maintaining gauge is very important. One or more PDC cutters may be positioned at the gauge area. Pre-flatted cutters are used to place more diamond table against gauge. Tungsten carbide inserts, some with natural or synthetic diamonds embedded in them, may be placed on the flank of the bit.

## PDC BITS APPLICATIONS

PDC bits have been used extensively and successfully over a wide range of formation types. The lack of rotating parts leads to greater life expectancy and as such long bit runs are achievable with resultant time and cost savings. A thorough review of the economics of running a PDC bit needs to be performed prior to selection due to its increased cost. The following guidelines list the typical applications of PDC bits.

**1-** PDC bits are typically useful for drilling long, soft to medium shale sequences which have a low abrasivity. In such formations they typically exhibit high ROP and extended life enabling entire sections to be drilled on one run.

**2-** PDC bits are not usually appropriate for highly abrasive well cemented sand sequences. When drilling tight siliceous formations the incidence of PDC chipping and breaking is dramatically increased resulting in less than expected ROP and bit life.

**3-**When drilling heterogeneous formations containing alternating shales and or shale limestone sequences the use of hybrid PDC bits is encouraged. This bit incorporates the use of back-up diamond studs behind the PDC cutter. When drilling harder abrasive strings, the diamond stud absorbs the increased weight required to drill the stringer and prevents premature damage and wear to the PDC cutter.

**4-** The use of bladed hybrid PDC bits is recommended for drilling hard formations. The deep watercourse on these bits enable optimum fluid flow across the cutter to efficiently reduce the friction temperatures induced. This efficient cooling will help minimise fracture of the PDC cutters.

**5-** When drilling mobile, plastic formations such as salt sections the use of eccentric PDC bits should be considered. These bits have proved successful in preventing incidence of stuck pipe in many areas where salt flow problems are experienced.



# 3-Diamond & TSP BITS

Diamond is the hardest mineral known to man with a value of 10 on the Mohs scale of mineral hardness. The Mohs scale ranges from 1 for very soft rocks such as talc to 10 for diamond. Diamond also posses the highest thermal conductivity of any other mineral allowing it to dissipate heat very quickly. This is a desirable property from a cutting element to prevent it from burning or thermal fracture due to overheating. Diamond and TSP (thermally stable PDC) bits (**Figure below**) are used for drilling hard and abrasive formations and particularly useful in turbine drilling applications. ROP's achieved with diamond bits are generally low due to the nature of the formations that they are designed to drill. Due to their fixed cutter design, greater endurance is achieved with diamond bits as compared with similar formation rated insert bits.

Figure 9.19 Natural diamond bit, Courtesy of Reed Hycalog

Diamond bits are manufactured as either drilling or coring bits.

Diamond bits comprise: natural diamond bits, TSP bits and impregnated bits. They share several features:

- similar profiles
- common drilling mechanism – grinding
- hydraulics dominated by flow through waterways
- application in hard and very hard formations, with corresponding poor performance in soft rocks.

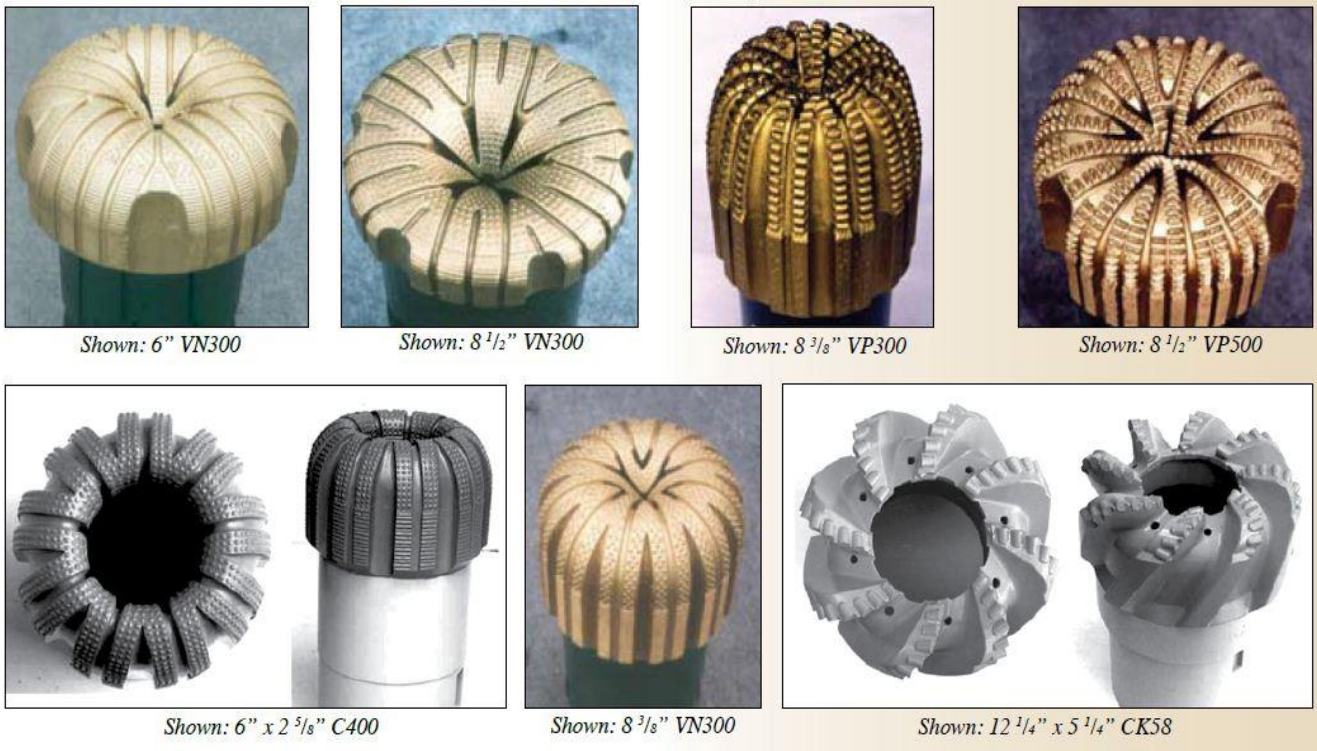

# CASING FUNCTIONS, TYPES AND DESIGN

## FUNCTIONS OF CASING

The functions of casing may be summarized as follows.

1. To keep the hole open and to provide support for weak, vulnerable or fractured formations. In the latter case, if the hole is left uncased, the formation may cave in and redrilling of the hole will then become necessary.

2. To isolate porous media with different fluid/pressure regimes from contaminating the pay zone. This is basically achieved through the combined presence of cement and casing. Therefore, production from a specific zone can be achieved.

3. To prevent contamination of near-surface fresh water zones.

4. To provide a passage for hydrocarbon fluids; most production operations are carried out through special tubings which are run inside the casing.

5. To provide a suitable connection for the wellhead equipment and later the christmas tree. The casing also serves to connect the blowout prevention equipment (BOPS) which is used to control the well while drilling.

6. To provide a hole of known diameter and depth to facilitate the running of testing and completion equipment.



## TYPES OF CASING

In practice, it would be much cheaper to drill a hole to total depth (TD), probably with a small diameter drill bit, and then case the hole from surface to TD. However, the presence of high-pressured zones at different depths along the wellbore, and the presence of weak, unconsolidated formations or sloughing, shaly zones, necessitates running casing to seal off these troublesome zones and to allow the drilling to TD. Thus, different sizes of casing are employed and this arrangement gives a tapered shape to the finished well. The types of casing currently in use are as follows:

**1. Stove Pipe**

Stove pipe (or marine-conductor, or foundation-pile for offshore drilling) is run to prevent washouts of near-surface unconsolidated formations, to provide a circulation system for the drilling mud and to ensure the stability of the ground surface upon which the rig is sited. This pipe does not usually carry any weight from the wellhead equipment and can be driven into the ground or seabed with a pile driver. A typical size for a stove pipe ranges from 26 in. to 42 in.

**2. Conductor Pipe**

Conductor pipe is run from the surface to a shallow depth to protect near surface unconsolidated formations, seal off shallow-water zones, provide protection against shallow gas flows, and provide a conduit for the drilling mud. One or more BOPs may be mounted on this casing or a diverter system if the setting depth of the conductor pipe is shallow. In the Middle East, a typical size for a conductor pipe is either 18 5/8 in. (473 mm) or 20 in. (508 mm). In North Sea exploration wells, the size of the conductor pipe is usually 26 or 30 in also in most of Iraqi wells. Conductor pipe is always cemented to surface. It is used to support subsequent casing strings and wellhead equipment or alternatively the pipe is cut off at the surface after setting the surface casing.

**3. Surface Casing**

Surface casing is run to prevent caving of weak formations that are encountered at shallow depths. This casing should be set in competent rocks such as hard limestone. This will ensure that formations at the casing shoe will not fracture at the high hydrostatic pressures which may be encountered later. The surface casing also serves to provide protection against shallow blowouts, hence BOPs are connected to the top of this string. The setting depth of this casing string is chosen so that troublesome formations, thief zones, water sands, shallow hydrocarbon zones and build-up sections of deviated wells may be protected. A typical size of this casing is l3 3/8 in. (240 mm) in the Middle East and 18 5/8 in. or 20 in. in North Sea operations.

**5. Production Casing**

Production casing is the last casing string. It is run to isolate producing zones, to provide reservoir fluid control and to permit selective production in multizone production. This is the string through which the well will be completed. The usual sizes of this string are 4 1/2, 5 and 7 in.

**6. Liners**

A liner is a string of casing that does not reach the surface. Liners are hung on the intermediate casing by use of a liner-hanger. In liner completions both the liner and the intermediate casing act as the production string. Because a liner is set at the bottom and hung from the intermediate casing, the major design criterion for a liner is usually the ability to withstand the maximum expected collapse pressure.

**TYPES OF LINERS**

Basic liner systems are shown in **Figure below**

**1. Drilling liners** are used to isolate lost circulation or abnormally pressured zones to permit deeper drilling.

**2. Production liners** are run instead of a full casing to provide isolation across the production or injection zones.

**3. The tie-back liner** is a section of casing extending upwards from the top of an existing liner to the surface. It may or may not, be cemented in place.

**4. The scab liner** is a section of casing that does not reach the surface. It is used to repair existing damaged casing. It is normally sealed with packers at top and bottom and, in some cases, is also cemented.

**5. The scab tie-back liner** is a section of casing extending from the top of an existing liner but does reach the surface. The scab tie-back liner is normally cemented in place.

Figure 4.1 Types of Liners

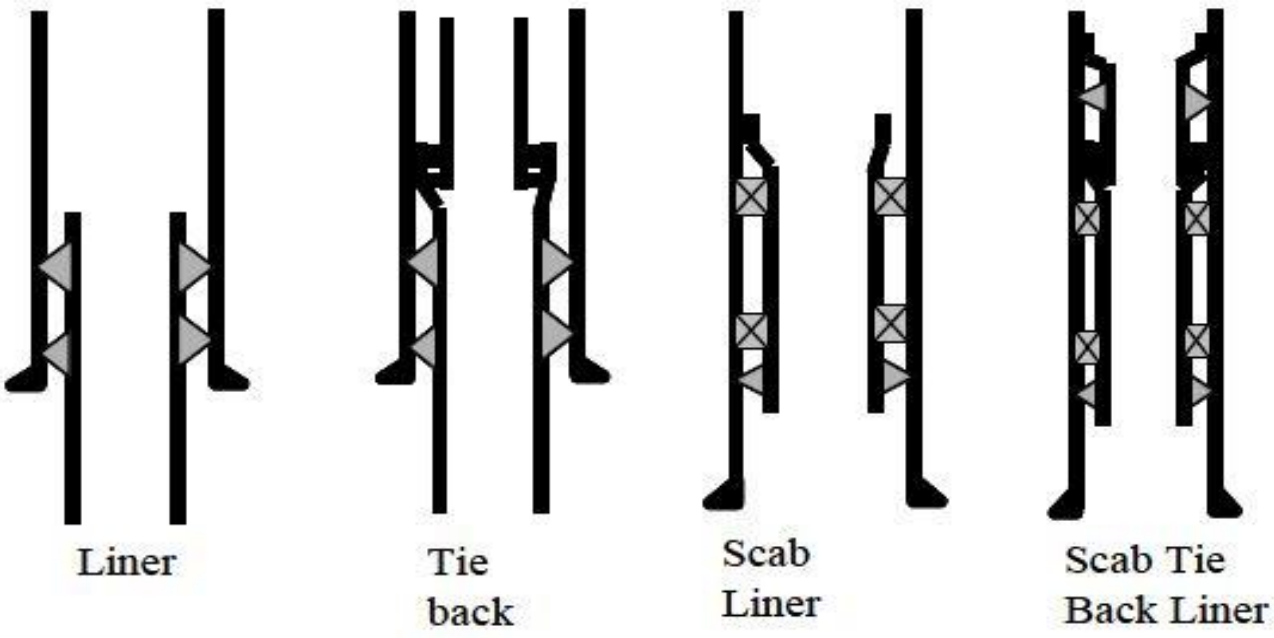


**ADVANTAGES OF A LINER**

The main advantages of a production liner are: (a) total costs of the production string are reduced, and running and cementing times are reduced; (b) the length of reduced diameter is reduced which allows completing the well with optimum sizes of production tubings.

- Complete wells with less weight landed on wellheads and surface pipe.
- A scab liner tie-back provides heavy wall cemented section through salt sections.
- Permits drilling with tapered drillstring.
- Where rig capacity cannot handle full string; when running heavy 9 5/8" casing.

**The disadvantages of a liner are:**

(a) possible leak across a liner hanger; and

(b) difficulty in obtaining a good primary cementation due to the narrow annulus between the liner and the hole.

## DESIGN CRITERIA

There are three basic forces which the casing is subjected to: collapse, burst and tension. These are the actual forces that exist in the wellbore. They must first be calculated and must be maintained below the casing strength properties. In other words, the collapse pressure must be less than the collapse strength of the casing and so on.
Casing should initially be designed for **collapse, burst and tension**. Refinements to the selected grades and weights should only be attempted after the initial selection is made.

# CEMENTING

## FUNCTIONS OF CEMENT

In an oil/ gas well, the primary functions of cement are:
1. Provide zonal isolation
2. Support axial load of casing strings
3. Provide casing protection against corrosive fluids
4. Support the wellbore
5. Protect water zones

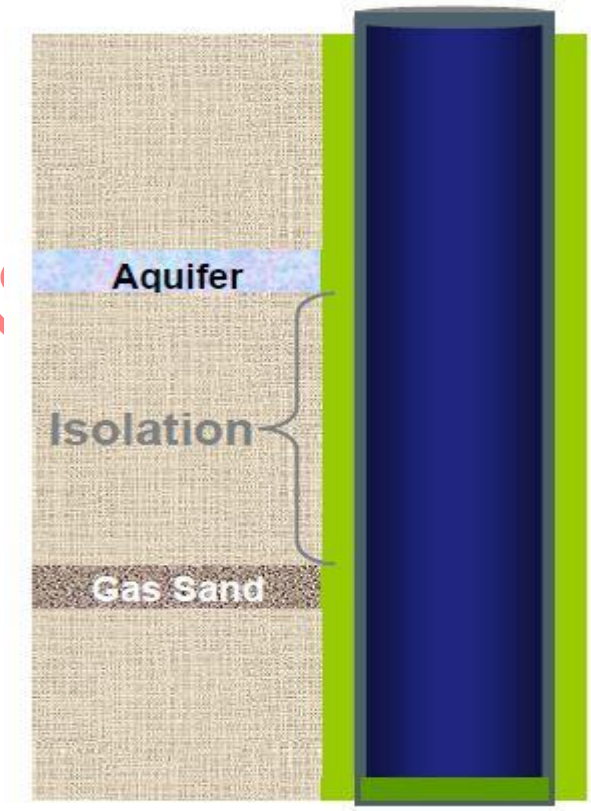


## CLASSES OF CEMENT

Oil well cement is manufactured to API Specification 10 and is divided into 8 classes (A-H) depending upon its properties. Class G and H are basic well cements which can be used with accelerators and retarders to cover a

wide range of depths and temperatures. The principal difference between these two classes is that Class H is significantly coarser than Class G. The classes are:

• **CLASS A**: Intended for use from surface to a depth of 6,000 ft (1,830 m), when special properties are not required. Similar to ASTM (American Society for Testing Materials) Type I cement.
• **CLASS B**: Intended for use from surface to a depth of 6,000 ft (1,830 m). Moderate to high sulphate resistance. Similar to ASTM Type II, and has a lower C3A content than Class A.
• **CLASS C**: Intended for use from surface to a depth of 6,000 ft (1,830 m) when conditions require early strength. Available in all three degrees of sulphate resistance, and is roughly equivalent to ASTM Type III. To achieve high early strength, the C3S content and the surface area are relatively high.
• **CLASS D**: Intended for use from 6,000 ft (1,830 m) to 10,000 ft (3,050 m) under conditions of
moderately high temperatures and pressures. It is available in MSR (moderate sulphate resistance) and HSR (high sulphate resistance) types.
• **CLASS E**: Intended for use from 10,000 ft (3,050 m) to 14,000 ft (4,270 m) under conditions of high temperatures and pressures. It is available in MSR and HSR types.
• **CLASS F**: Intended for use from 10,000 ft (3,050 m) to 16,000 ft (4,880 m) depth under conditions of extremely high temperatures and pressures. It is available in MSR and HSR types.
• **CLASS G + CLASS H**: Intended for use as a basic well cement from surface to 8,000 ft (2,440 m) as manufactured, or can be used with accelerators and retarders to cover a wide range of well depths and temperatures. No additions other than calcium sulphate or water, or both, shall be interground or blended with the clinker during manufacture of Class G and H well cements. They are available in both MSR and HSR types.



| Class | Depth Range* ft. | Available Sulfate Resistance | Characteristics, Availability |
|---|---|---|---|
| A | 0-6,000 | Ordinary | Common (construction), widely available |
| B | 0-6,000 | Moderate | Special (construction) |
| C | 0-6,000 | Ord., mod., high | High early strength, fine grind, widely avail. |
| D | 6,000-10,000 | Mod., high | Coarse grind, retarded |
| E | 10,000-14,000 | Mod., high | Same as D |
| F | 10,000-16,000 | Mod., high | Same as D |
| G | 0-8,000 | Mod., high | Basic cement, no chemical retarder |
| H | 0-8,000 | Moderate | Basic cement, coarse grind, no chemical retarder |
| J | 12,000-16,000 | High | Resists strength retrogression, min. temp. 230°F |

Fig. 23 shows the water/cement ratios as per API specification.

| Class | Percent Water | Gals. Water Per Sack | Slurry Den., ppg* | Slurry Yield, ft³/sk* |
|---|---|---|---|---|
| A | 46 | 5.19 | 15.6 | 1.17 |
| B | 46 | 5.19 | 15.6 | 1.17 |
| C | 56 | 6.32 | 14.8 | 1.32 |
| D | 38 | 4.28 | 16.4 | 1.05 |
| E | 38 | 4.28 | 16.4 | 1.05 |
| F | 38 | 4.28 | 16.4 | 1.05 |
| G | 44 | 4.96 | 15.8 | 1.14 |
| H | 38 | 4.28 | 16.4 | 1.05 |
| J | 38-43.5 | 4.28-4.91 | 16.0-15.4 | 1.09-1.17 |

## CEMENTING ADDITIVES

Additional chemicals are used to control slurry density, rheology, and fluid loss, or to provide more specialised slurry properties. Additives modify the behaviour of the cement slurry allowing cement placement under a wide range of downhole conditions. There are many additives available for cement and these can be classified under one of the following categories:

**Accelerators**: Most operators wait for cement to reach a minimum compressive strength of 500 psi before resuming operations. At temperatures below 100 °F common cement may require a day or two to develop this strength level. chemicals which reduce the thickening time of a slurry and increase the rate of early strength development. Low concentrations of cement accelerators (2-4% by weight of cement) are used to shorten the setting time of cement and promote rapid strength development.They are usually use in conductor and surface casing to reduce waiting on cement time (WOC). Calcium chloride ($CaCl_2$), sodium chloride (NaCl) and sea water are commonly used as accelerators.

**Retarders**: chemicals which retard the setting time (extend the thickening) of a slurry to aid cement placement before it hardens. Retarders Increased welldepths and formation temperatures require the use of cement retarders to extend the pumpability of cements. Most retarders also affect cement viscosity to some extent..These additives are usually added to counter the effects of high temperature.They are used in cement slurries for intermediate and production casings, squeeze and cement plugs and high temperature wells. Typical retarders include: sugar; lignosulphonates, hydroxycarboxylic acids, inorganic compounds and cellulose derivatives. Retarders work mainly by adsorption on the cement surface to inhibit contact with water and elongate the hydration process; although there are other chemical mechanisms involved.

Lignosulfonates are used to about 200°F bottom-hole circulating temperature (BHCT). Concentrations of 0.1% to 1% are used in most slurry applications to give both predictable thickening times and compressive strength.

Organic acids can be used from about 200°-400°F BHCT. They are used on concentrations of 0.1% to 2.5% by weight of cement as effective retarders for hightemperature environments.

**Extenders**: materials which lower the slurry density and increase the yield to allow weak formations to be cemented without being fractured by the cement cloumn.Examples of extenders include: water, bentonite, sodium silicates, pozzlans, gilsonite, expanded perlite, nitrogen and ceramic microspheres. Bentonite clay can be used in concentrations up to 25% by weight of Portland cement to decrease the density.

**Weighting Agents (density adjusters)**: materials which increase slurry density including barite and haematite High-density slurries are used to cement high-pressur;;: wellswhere increased hydrostatic head is required to hold down gas or fluids. .
- Hematite, sp. gr. of 5, is used to increase slurry density to 21 1b/gal. Barite, sp. gr. 4.2 can increase slurry weight to 18Ib/gal.
- Sand, sp.gr. 2.65, has a low water requirement and helps to densify slurries to 17.5Ib/gal.



**Dispersants:** chemicals which lower the slurry viscosity and may also increase free water by dispersing the solids in the cement slurry. Dispersants are solutions of negatively charged polymer molecules that attach themselves to the positively charges sites of the hydrating cement grains.The result is an increased negative on the hydrating cement grains resulting in greater repulsive forces and particle dispersion.
The most common dispersants are aryl-alkyl sulphonates used in concentrations of 0.3% to 2% by weight of cement polyphosphate, lignosulfonate, salt and organic acid.

**Fluid-Loss Additives**: Excessive fluid losses from the cement slurry to the formation can affect the correct setting of cement. Fluid loss additives are used to prevent slurry dehydration and reduce fluid loss to the formation.Examples include: cationic polymer, nonionic synthetic polymer, anionic synthetic polymer and cellulose derivative.

**Lost Circulation Control Agents**: materials which control the loss of cement slurry to weak or fractured formations.

**Strength Retrogression: At** temperatures above 230 F, normal cement develop high permeab - ility and reduction in strength. the addition of 30-40% BWOC (by weight of cement) silica flour prevents both strength reduction and development of permeability at high temperatures.

**Miscellaneous Agents**: e.g. Anti-foam agents, fibres, latex.

# CEMENTING HARDWARE

Some or all of the following equipment is used during cementing operations.

**1. Guide shoes**

A guide shoe is used to guide the casing through the hole, avoiding jamming the casing in washed-out zones, or in deviated wells. It can be a simple guide or may contain a ball valve or flapper valve, **Figure below.** When a guide shoe contains a valve element it is described as a float shoe. A float shoe prevents cement from flowing back into the casing once the cement is displaced behind the casing. Shoes have either inner parts made of aluminium or cement; both being easily drillable, with the advantage that cement is more resistant to impact. Float shoes have all the advantages of the guide shoes, plus the float valve to avoid back flow and provide casing buoyancy. The main disadvantage of a float shoe is the extra time it takes to run casing in hole (RIH); with casing running operations temporarily stopped to fill the casing from the top. By using an orifice fill shoe (automatic fill-up shoe), RIH time can be reduced as the casing is filled up while running in hole, see bottom illustration in **Figure below**. Once the casing reaches TD, the float valve can be activated by dropping a ball from surface and pressuring on it to remove an insert and activate the valve, **Figure below.**

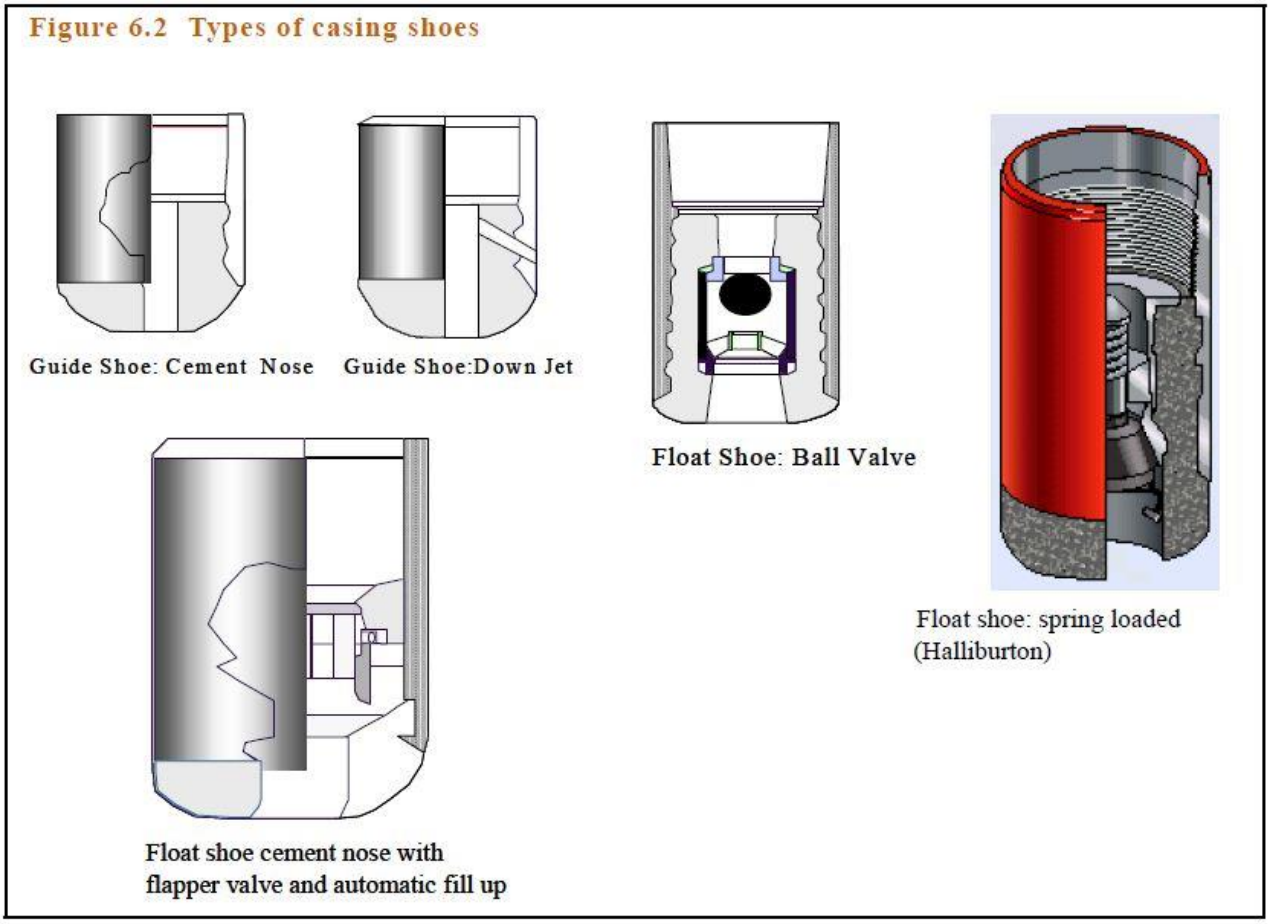


**Reamer shoes overcome wellbore obstructions and guide the casing or liner to total depth**.


**2. Float Collars**

A float collar is a one way valve placed at one or two joints above the shoe. The float collar provides the same functions as a float shoe by preventing fluid back flow into the casing: mud backflow during running in hole and cement slurry backflow after cement displacement. The distance between the shoe and float collar is called Shoe Track. The float valve can either be a ball type or a flapper, **Figure below**. Flapper type valves are normally used where a small hydrostatic pressure difference is expected, providing a better seal than a ball type valve.



Figure 6.3 Float Collars, Courtesy of Weatherford (left & middle) and Halliburton (right)

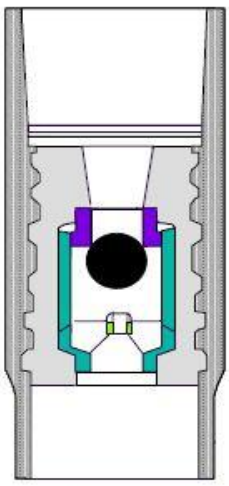

Float collar - Ball Valve

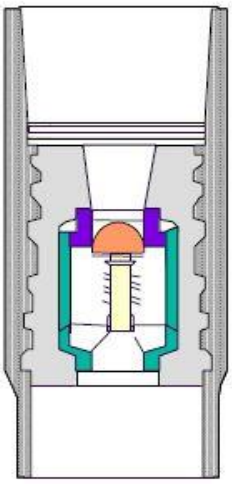

Float collar - Sure Seal

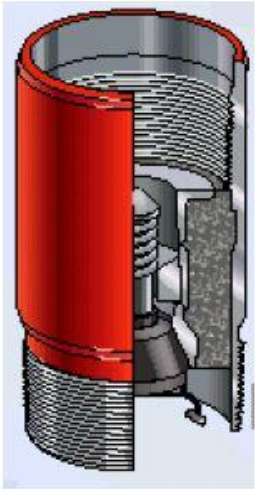

Float collar: Super Seal

**3. Centralisers**

A centralizer is a mechanical device attached to the outside of casing. The primary purpose of this equipment is to center the casing in the hole and provide a uniform flow passage with relatively equal frictional pressure losses surrounding the casing. Another major function of centralizers in a deviated hole is to help prevent differential pipe sticking.

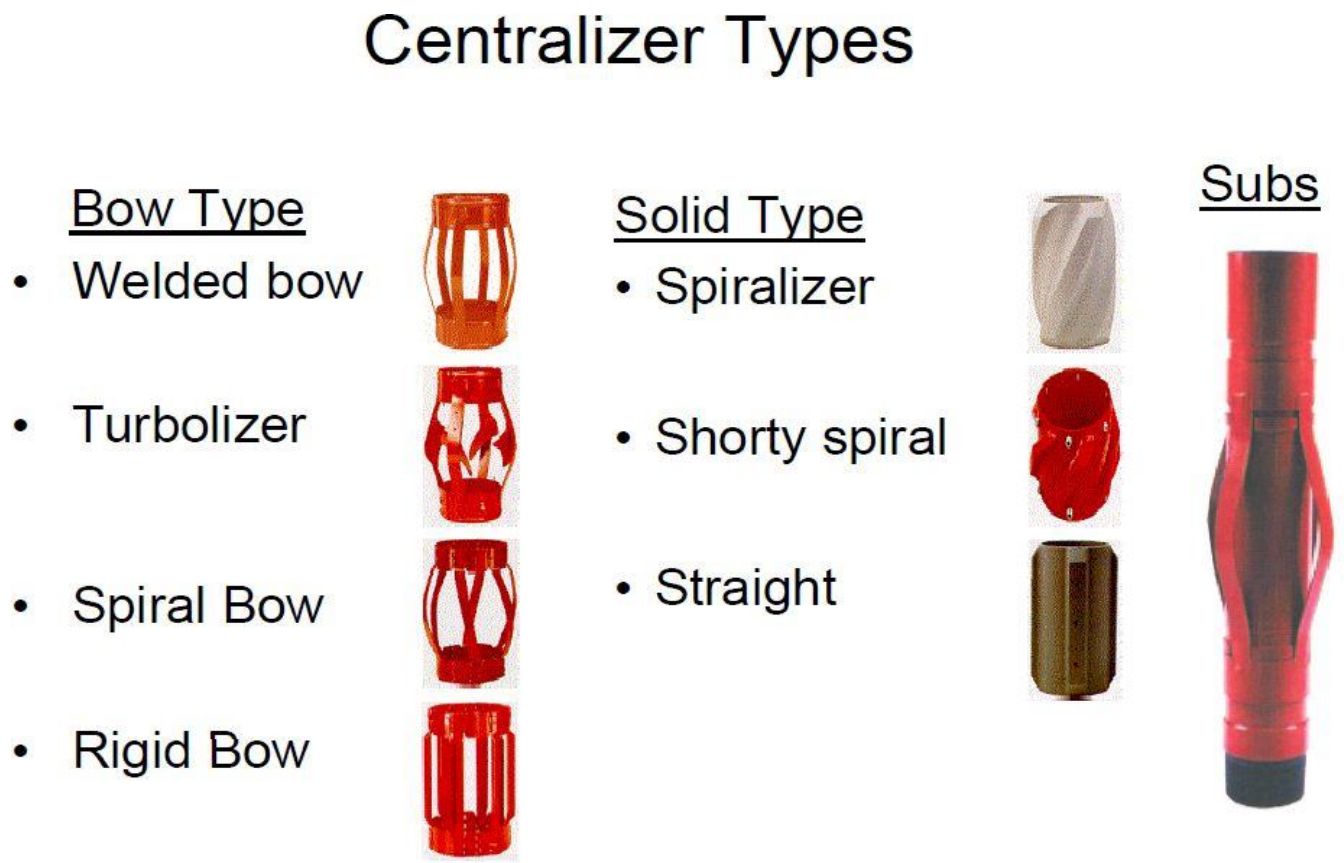


**4-Cement Baskets**

Cement baskets protect weak formations from excessivehydrostatic pressure exerted by the weight of the cement column. They form a restriction against a downhole fluid motion by reducing the flow area. They are normally installed on the casing string above weak formations, but they are also used in stage cementing or in cementing the annulus from the surface.

**5-Cement Plugs**

The main functions of cement plugs are, **Figure below**

• Separate mud from cement

• Wipe the casing from mud before cement is pumped and then wipe casing from th cement film after the complete volume of cement is pumped.

• Prevent over-displacement of cement

• Give surface indication that cement placement is complete

• Allow the casing to be pressure tested

In effect, the cement plugs act as barriers between mud and cement providing physical separa - tion between the two fluids. Bad cement jobs, especially around the casing shoe, result from cement contaminated with mud.



Figure 6.5 Top & Bottom Plugs, Courtesy of Weatherford (left & centre), Davis (right)

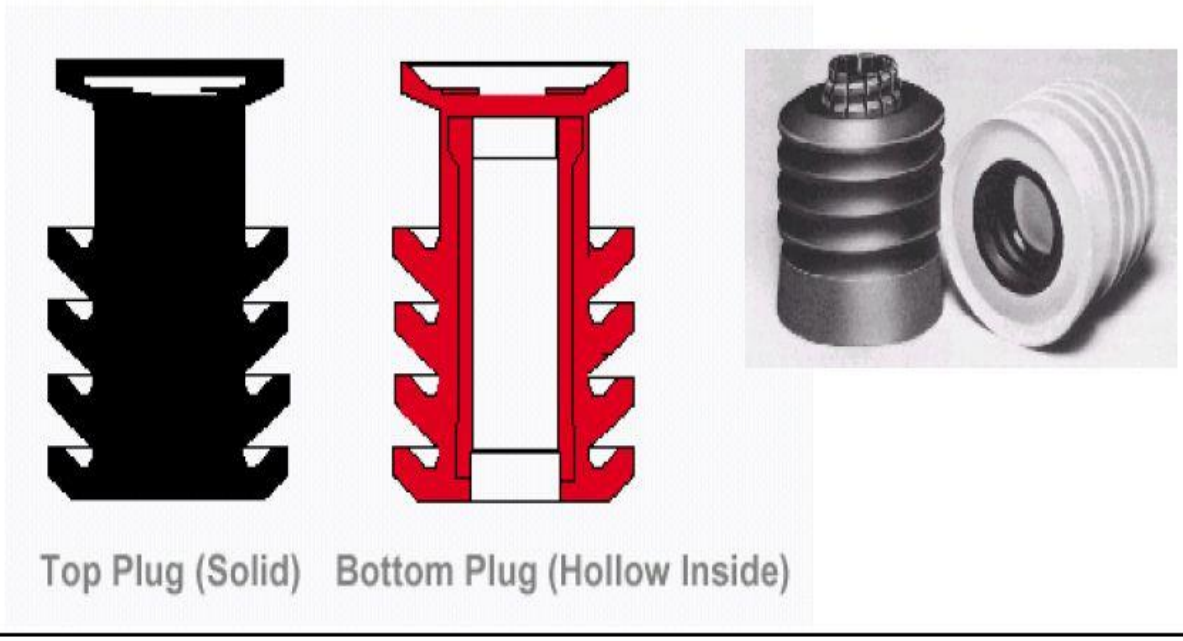

**6-Stop Collars**

The stop collar serves as a stop to any cementing aid that is attached to the outside of the casing. It is available in various designs for standard and slim hole clearance.

7- **Multi-Stage Collar**

A multi-stage collar (or DV tool) is used to allow the casing to be cemented in two stages to prevent weak formations being subjected to excessive hydrostatic pressure of long cement columns.The tool is actually a small section of casing with the same strength properties as the remaining string. The tool has two internal sleeves and openings which are covered by the lower sleeve, **Figure below** The lower sleeve is opened by dropping a bomb which pushes
the sleeve down and uncovers the holes. This allows the cement to be pumped through the casing and the holes in the stage collar and placed around the casing. When the required volume of cement is pumped, the holes are closed by dropping a closing plug which pushes an upper sleeve downward to cover the holes in the stage collar.

Multi-stage cementing is used to:

- reduce total pumping pressure or pumping time
- reduce total hydrostatic pressure of cement on weak formations or on casing
- allow selective cementing of formations within the open hole

**8- Scratchers**

Scratchers are designed to clean mud-filter cake off the wall of the wellbore when the casing is reciprocated or rotated. Reinforcement of the cement sheath is an added advantage of scratchers. Scratchers should always be used when thick mudfilter cake is suspected on the walls of the hole. The scratchers help remove filter cake and prepare the formation for bonding with the cement. In combination with centralizers and pipe reciprocation, scratchers help ensure the success of primary cementing jobs.



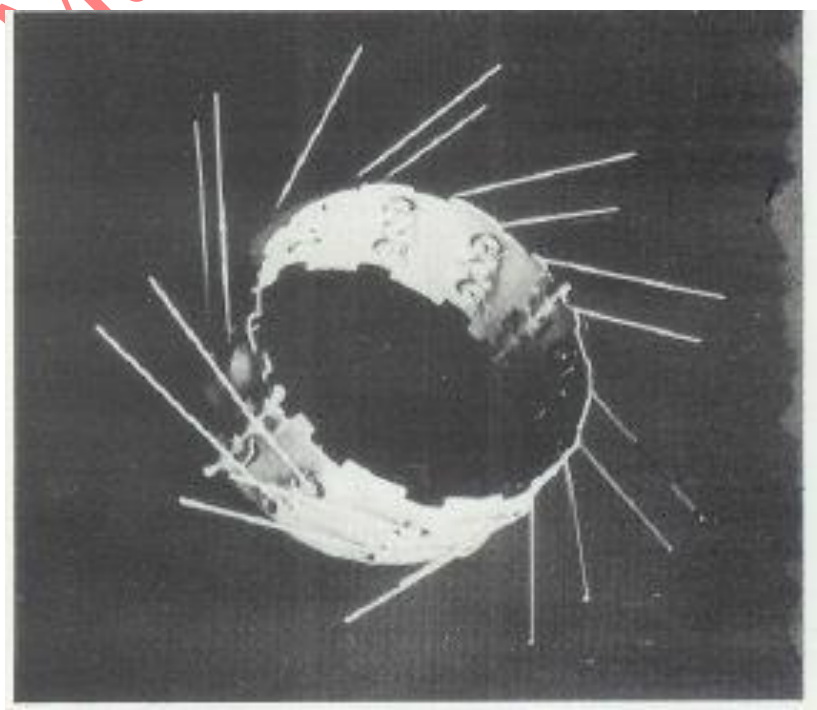

Figure 6.6 Stage Collar (DV Tool), Courtesy of Davis Lynch

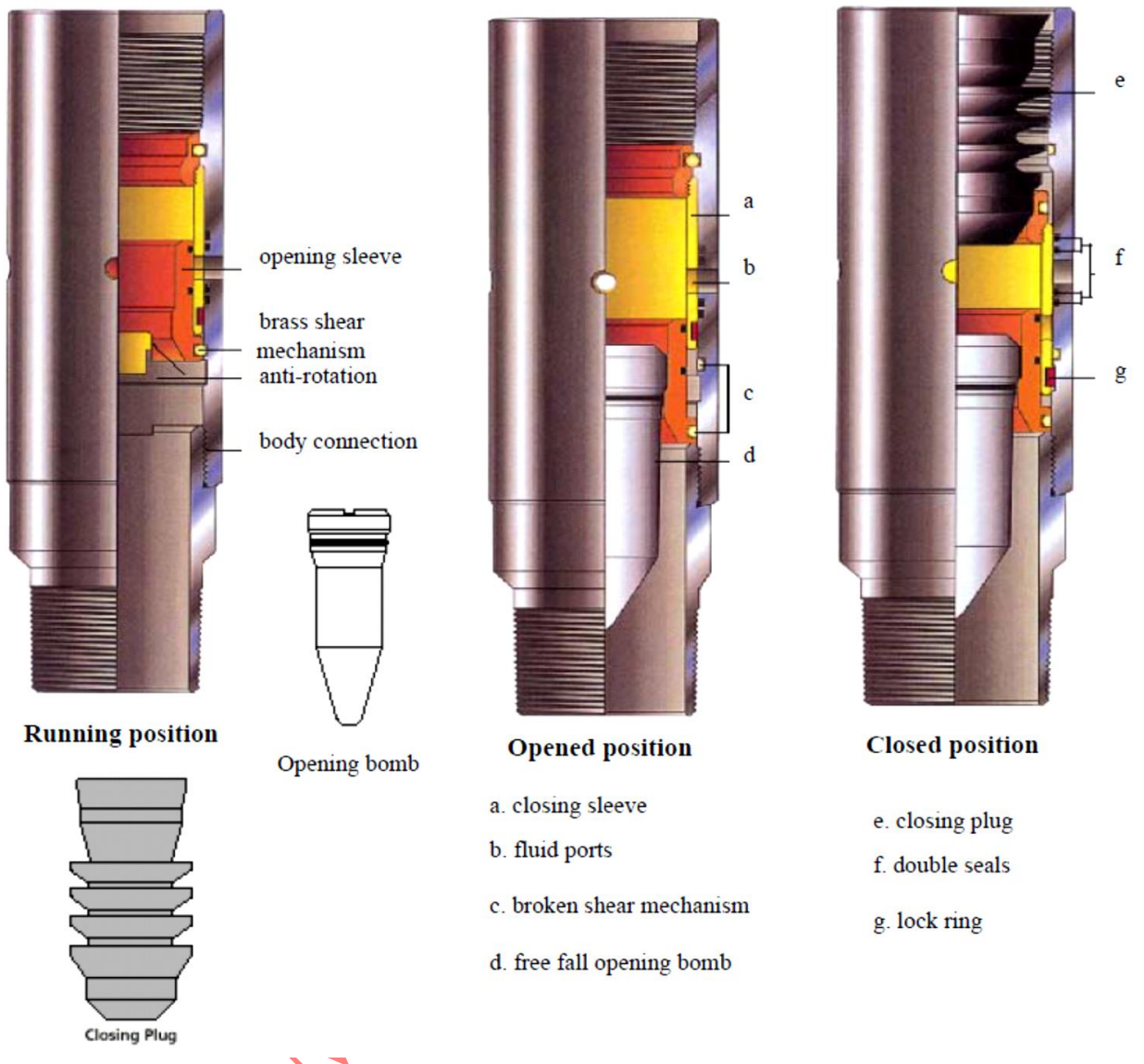


## 9-Wiper Plugs

A bottom plug should be used to wipe mud off the casing ahead of the cement, as well as to separate the mud and the cement. Without a bottom plug, the mud subsequently wiped by the top plug will accumulate ahead of the top plug and could easily amount to 20 to 30 feet in 5t or 7" casing at 7-9,000 feet if the mud film is only as much as 1/32" thick. Top plugs are used to separate the displacing fluid and the cement and provide a shut-off if the plug is pumped down to the float collar.

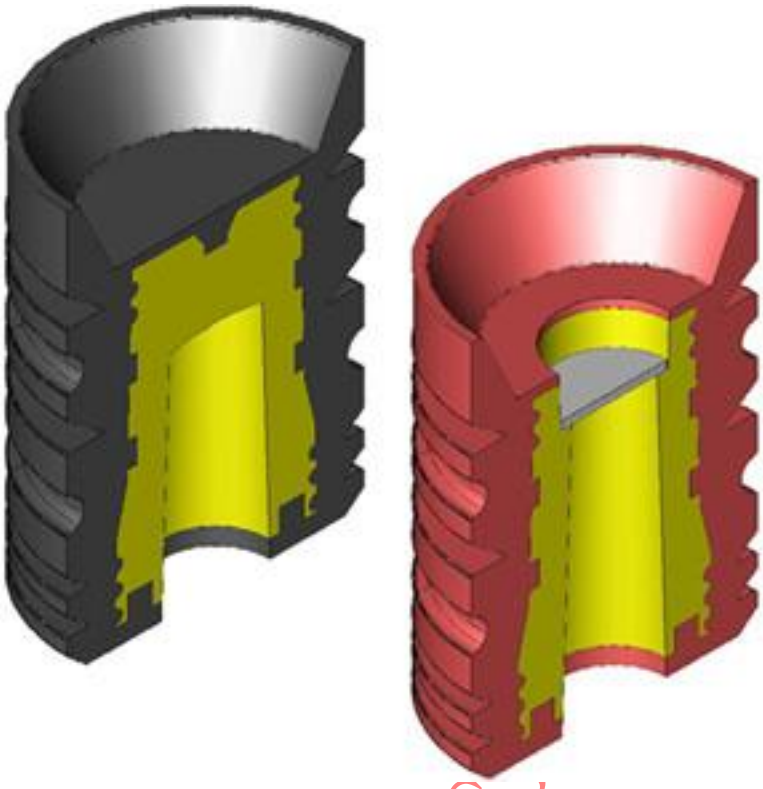

## ROTARY SYSTEM ACCESSORIES

Pipe Ramp :An angled ramp for dragging drill pipe up to the drilling platform or bringing pipe down off the drill platform.

**Pipe Rack**
A horizontal support for tubular goods.

**RAT HOLE**

A hole in the rig floor 30 to 35 feet deep, lined with casing that projects above the floor. The kelly is placed in the rathole when hoisting operations are in progress.

## SLIPS

Wedge-shaped pieces of metal with teeth or other gripping elements that are used to prevent pipe from slipping down into the hole or to hold pipe in place. Rotary slips fit around the drill pipe and wedge against the master bushing to support the pipe. Power slips are pneumatically or hydraulically actuated devices that allow the crew to dispense with the manual handling of slips when making a connection. Packers and other down hole equipment are secured in position by slips that engage the pipe by action directed at the surface .


## DOG HOUSE

A small enclosure on the rig floor used as an office for the driller or as a storehouse for small objects. Also, any small building used as an office or for storage.

**Driller's Console**

The control panel, located on the platform, where the driller controls drilling operations.

**Elevators**

A set of clamps that grips a stand, or column, of casing, tubing, drill pipe, or sucker rods, so the stand can be raised or lowered into the hole.

**Spinning Chain**

A relatively short length of chain attached to the tong pull chain on the manual tongs used to make up drill pipe. The spinning chain is attached to the pull chain so that a crew member can wrap the spinning chain several times around the tool joint box of a joint of drill pipe suspended in the rotary table. After crew members stab the pin of another tool joint into the box end, one of them then grasps the end of the spinning chain and with a rapid upward motion of the wrist "throws the spinning chain"—that is, causes it to unwrap from the box and coil upward onto the body of the joint stabbed into the box. The driller then actuates the makeup cathead to pull the chain off of the pipe body, which causes the pipe to spin and thus the pin threads to spin into the box.


**Tongs**

The large wrenches used for turning when making up or breaking out drill pipe, casing, tubing, or other pipe; variously called casing tongs, rotary tongs, and so forth according to the specific use. Power tongs are pneumatically or hydraulically operated tools that spin the pipe up and, in some instances, apply the final makeup torque.

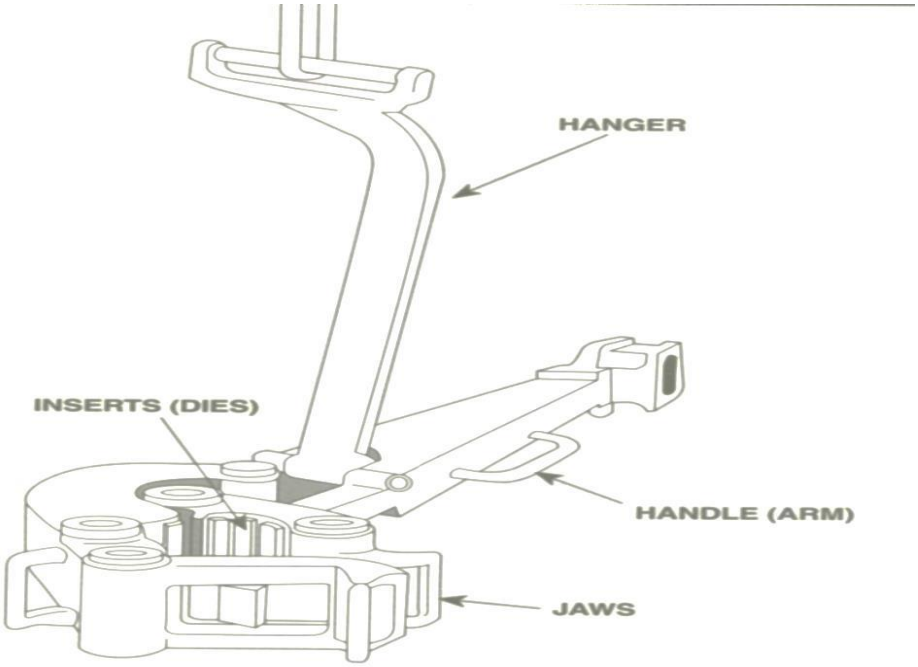


## Weight Indicator

A device for measuring the weight of the drill string. Monthly calibration to calculated drill string weight is required by API.

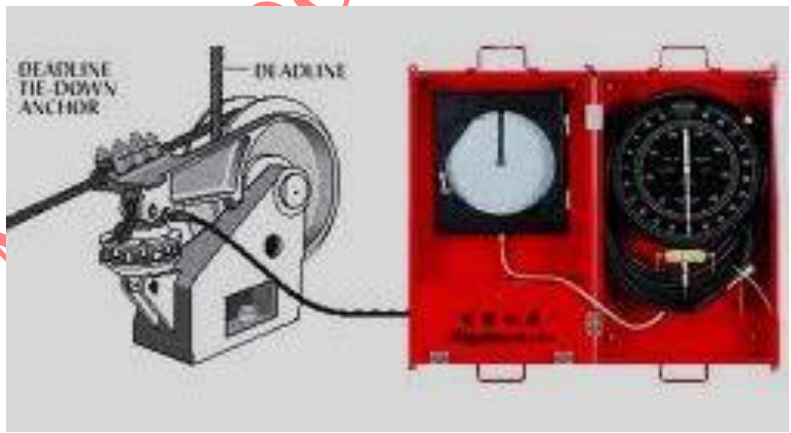


## SAFETY CLAMP

A clamp placed tightly around a drill collar that is suspended in the rotary table by drill collar slips.

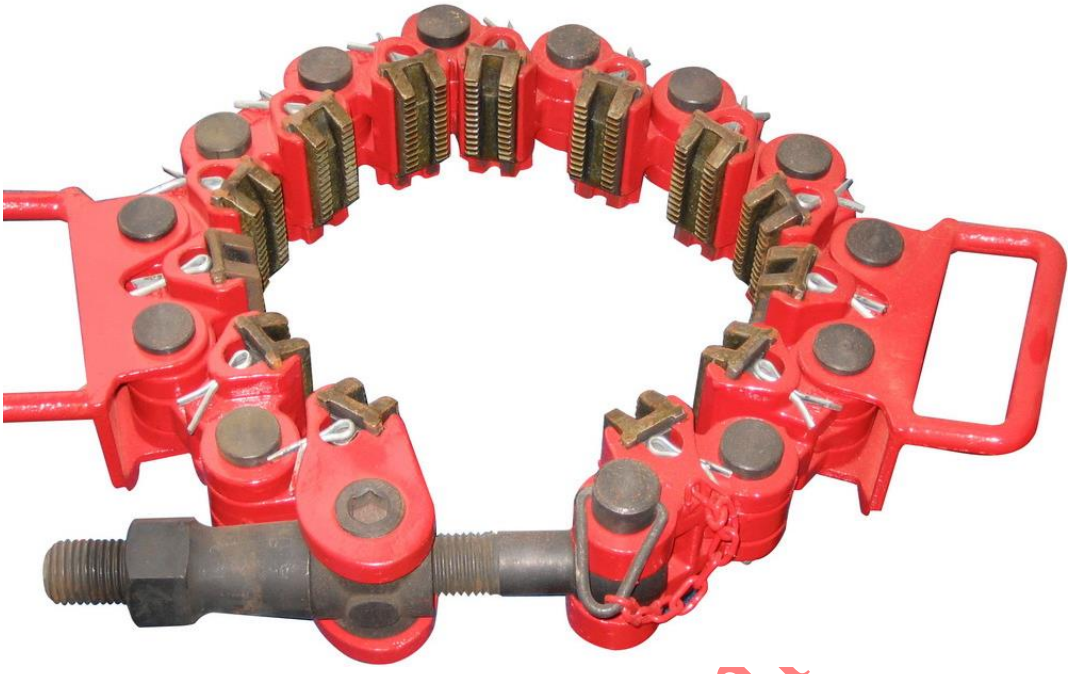

**SAFETY SLIDE**

A device normally mounted near the monkey board to afford the derrickhand a means of quick exit to the surface in case of emergency. It is usually affixed to a wireline, one end of which is attached to the derrick or mast and the other end to the surface. To exit by the safety slide, the derrickhand grasps a handle on it and rides it down to the ground. Also called a Geronimo.

**Mousehole** : shallow bores under the rig floor, usually lined with pipe, in which joints of drill pipe are temporarily suspended for later connection to the drill string.

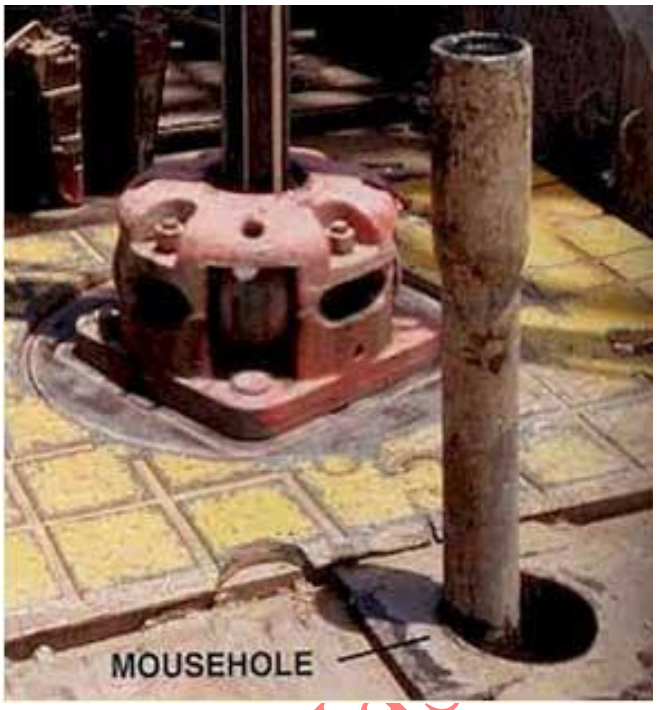


**PIPE SPINNER (SPINNING WRENCH)**

n: air-powered or hydraulically powered wrench used to spin drill pipe in making or breaking connections.

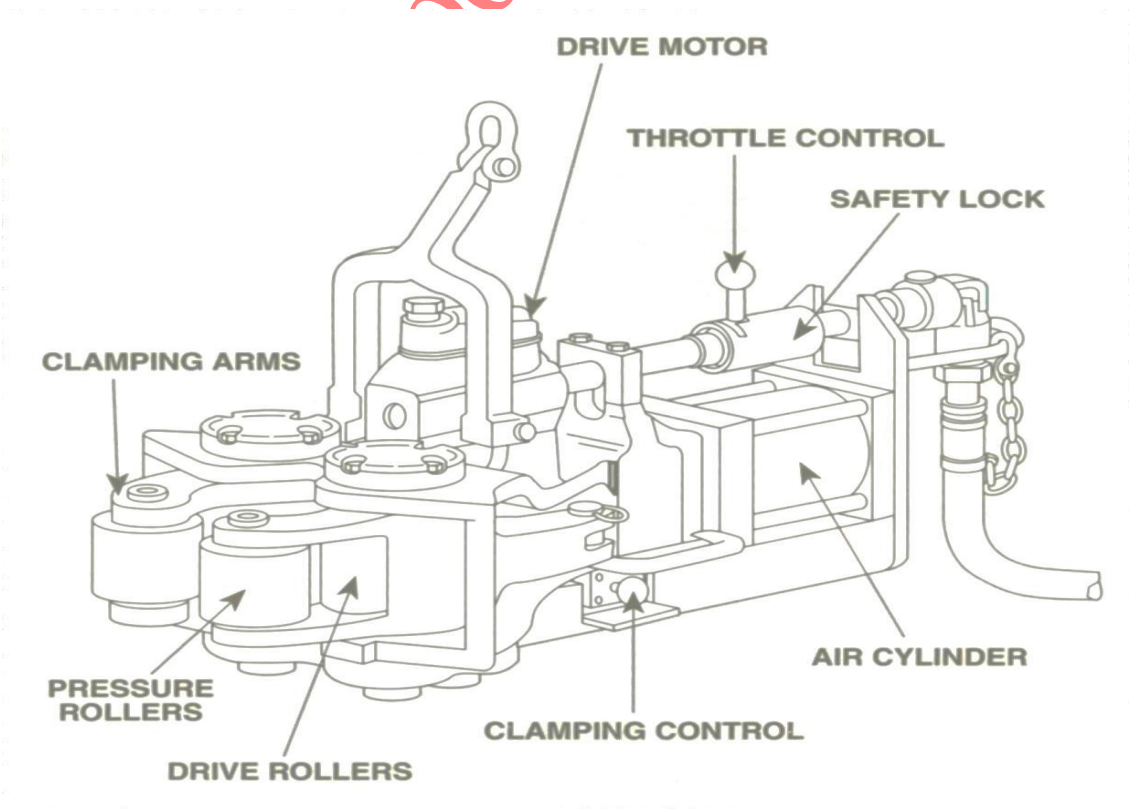

# WELL CONTROL SYSTEM

## Blowout preventers (BOPs)

Blowout preventers (BOPs), in conjunction with other equipment and techniques, are used to close the well in and allow the crew to control a kick before it becomes a blowout.
Blowout preventer equipment should be designed to:
1. Close the top of the hole.
2. Control the release of fluids.
3. Permit pumping into the hole.
4. Allow movement of the inner string of pipe.

BOPs equipment are selected based on the maximum expected wellbore pressures. The pressure rating, size and number of BOP components must be determined by the Drilling Engineer prior to drilling the well.
Basic types of blowout preventers on drilling rig are: annular preventers, ram preventers, rotational preventers and diverters. BOPs are rated by API as 3M (3000 psi), 5M, 10 M and 15 M. For HPHT, BOPS are either 15 M or 20 M.
The recommended component codes for designation of BOP stack arrangements are as follows:

- **A = annular type blowout preventer**
- **G = rotating head**
- **R = single ram type preventer with one set of rams, blind or pipe, as operator prefers**
- **Rd = double ram type preventer with two sets of rams, positioned as operator prefers**
- **Rt = triple ram type preventer with three sets of rams, positioned as operator prefers**
- **S = spool with side outlet connections for choke and kill lines**
- **M = 1,000 psi (68.95 bar) rated working pressure**

BOP components are typically described upward from the uppermost piece of the permanent wellhead equipment, or from the bottom of the BOP stack: for example 10K – 13 5/8 – SRRA This BOP stack would be rated 10000 psi (69 MPa) working pressure, would have a through bore of 13 5/8 inches (34,61 cm), and would be arranged according to picture.

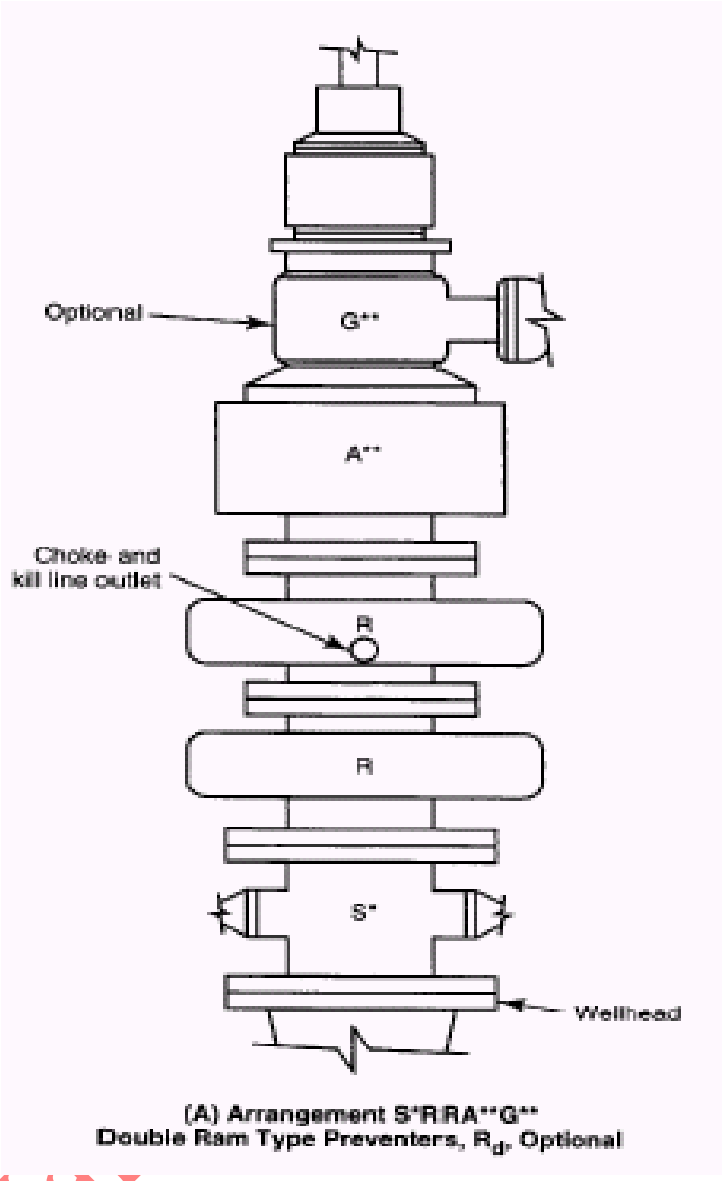
Optional
G**
A**
Choke and
kill line outlet
R
R
S*
Wellhead
(A) Arrangement S*RRA**G**
Double Ram Type Preventers, $R_d$, Optional


diverter


annular bop


28/10/2005

In the BOP stack they are always positioned in such way, that annular preventer is the working preventer positioned on the top of the stack, and ram preventer is on the bottom as the backup. Working preventer is always positioned far from the source of danger, to be in position to change it if fails.

BOPs Rating

| API Class | Working pressure $10^5$ Pa (psi) | Service Condition |
|---|---|---|
| 2 M | 138 (2000) | light duty |
| 3 M | 207 (3000) | low pressure |
| 5 M | 345 (5000) | medium pressure |
| 10 M | 689 (10000) | high pressure |
| 15 M | 1034 (15000) | extreme pressure |

**ANNULAR BOP**

The annular blowout preventer was invented by Granville Sloan Knox in 1946; a U.S. patent for it was awarded in 1952.[3] Often around the rig it is called the "Hydril", after the name of one of the manufacturers of such devices.

An annular-type blowout preventer can close around the drill string, casing or a non-cylindrical object, such as the kelly. Drill pipe including the larger-diameter tool joints (threaded connectors) can be "stripped" (i.e., moved vertically while pressure is contained below) through an annular preventer by careful control of the hydraulic closing pressure. Annular blowout preventers are also effective at maintaining a seal around the drillpipe even as it rotates during drilling. Regulations typically require that an annular preventer be able to completely close a wellbore, but annular preventers are generally not as effective as ram preventers in maintaining a seal on an open hole. Annular BOPs are typically located at the top of a BOP stack, with one or two annular preventers positioned above a series of several ram preventers.

An annular blowout preventer uses the principle of a wedge to shut in the wellbore. It has a donut-like rubber seal, known as anelastomeric packing unit, reinforced with steel ribs. The packing unit is situated in the BOP housing between the head and hydraulic piston. When the piston is actuated, its upward thrust forces the packing unit to constrict, like a sphincter sealing the annulus or openhole. Annular preventers have only two moving parts, piston and packing unit, making them simple and easy to maintain relative to ram preventers.

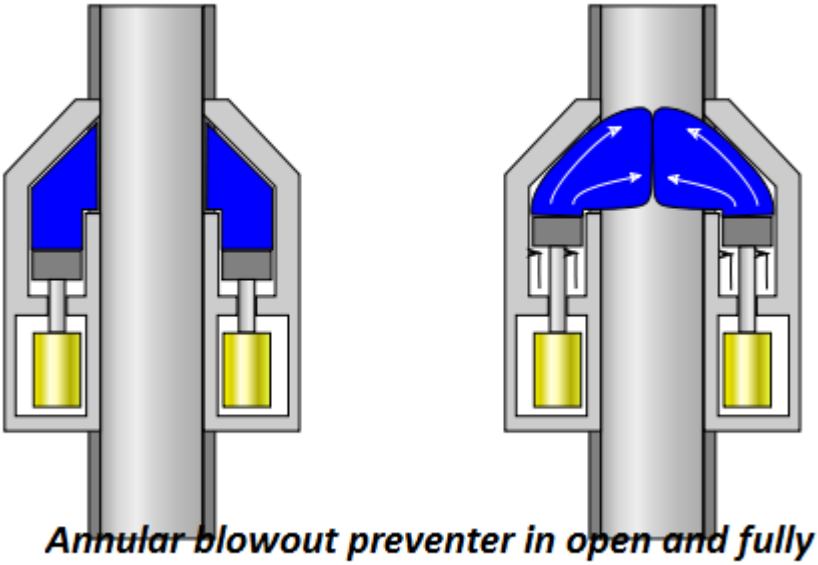

***Annular blowout preventer in open and fully closed configurations.***

**RAM-TYPE PREVENTERS**

The ram BOP was invented by James Smither Abercrombie and Harry S. Cameron in 1922, and was brought to market in 1924 by Cameron Iron Works.

A ram-type BOP is similar in operation to a gate valve, but uses a pair of opposing steel plungers, rams. The rams extend toward the center of the wellbore to restrict flow or retract open in order to permit flow. The inner and top faces of the rams are fitted with packers (elastomeric seals) that press against each other, against the wellbore, and around tubing running through the wellbore. Outlets at the sides of the BOP housing (body) are used for connection to choke and kill lines or valves.

Rams, or ram blocks, are of four common types: *pipe*, *blind*, *shear*, and *blind shear*.

**Pipe rams** close around a drill pipe, restricting flow in the annulus (ring-shaped space between concentric objects) between the outside of the drill pipe and the wellbore, but do not obstruct flow within the drill pipe. Variable-bore pipe rams can accommodate tubing in a wider range of outside diameters than standard pipe rams, but typically with some loss of pressure capacity and longevity.

**Blind rams** (also known as sealing rams), which have no openings for tubing, can close off the well when the well does not contain a drill string or other tubing, and seal it.

**Shear rams** cut through the drill string or casing with hardened steel shears.

**Blind shear rams** (also known as shear seal rams, or sealing shear rams) are intended to seal a wellbore, even when the bore is occupied by a drill string, by cutting through the drill string as the rams close off the well. The upper portion of the severed drill string is freed from the ram, while the lower portion may be crimped and the "fish tail" captured to hang the drill string off the BOP.

In addition to the standard ram functions, variable-bore pipe rams are frequently used as test rams in a modified blowout preventer device known as a stack test valve. Stack test valves are positioned at the bottom of a BOP stack and resist downward pressure (unlike BOPs, which resist upward pressures). By closing the test ram and a BOP ram about the drillstring and pressurizing the annulus, the BOP is pressure-tested for proper function.

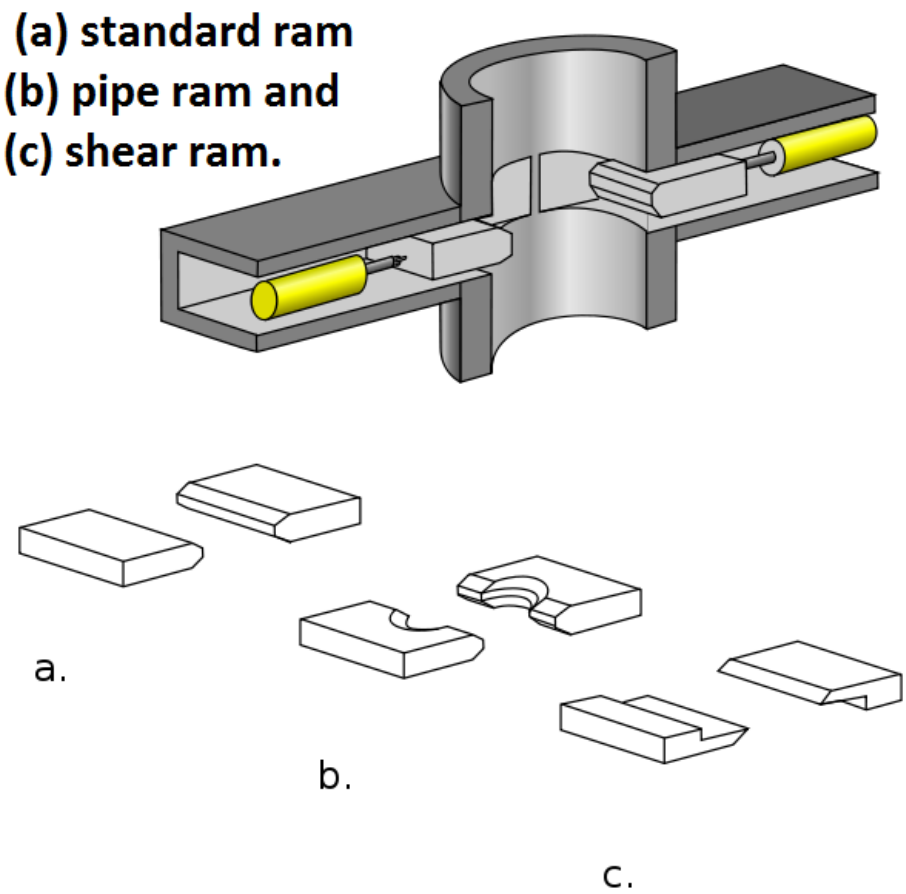


**ROTATIONAL PREVENTERS**

Rotational preventers are used:

-For drilling in layers that are suspected to cause possible kick off.

-When drilling on the balance or under balanced (drilling the rocks of great permeability or porosity; to avoid pollution with mud).

-When the drilling is done using air or gas.

Rotational preventer is always positioned at the top of the stack above annular preventer. It is used when differential pressure at the wellhead does not exceed 34,5—105 Pa (500 PSI),

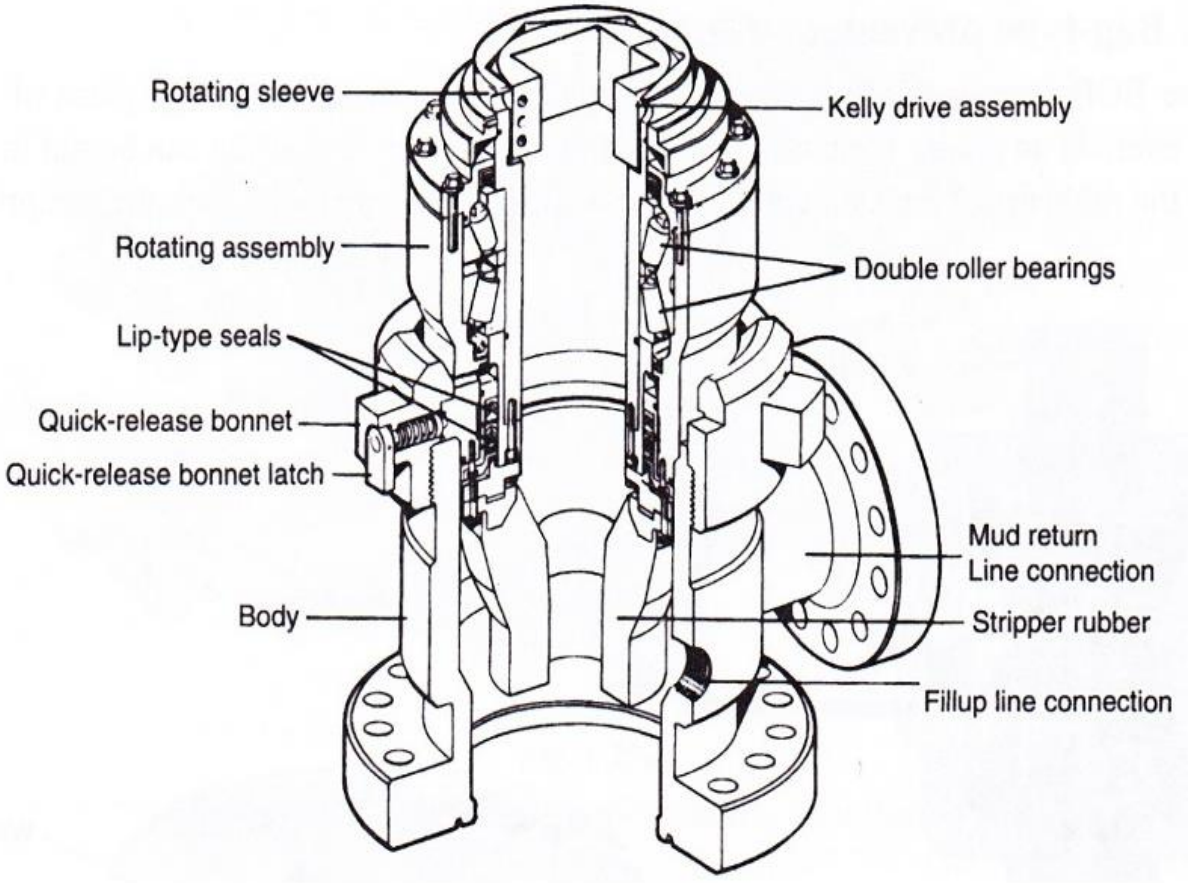


**Diverters**

Diverters as the name says are used to, direct eventual invaded higher pressure fluid from the well, to the cleaning reservoir system, and not to danger the workers on the working platform of the derrick. That is accomplished by closing the working sealing element of the diverter and opening diverter pipe lines whose diameter is from 101,6 mm (4") to 304,8 mm (12").

There are usually two relief lines, and one that is opened must be always in the direction that provide that gas or dangerous fluid will be carried away of the rig floor. The line is opened at the same moment the working sealing element is closed. It is important because failing to do so it is possible to fracture shallow rocks and the gas or high pressure fluid can rupture to the surface near or far from the rig uncontrolled.

Diverters are mainly used in off-shore drilling. On shore they are rare in use: mainly in drilling for the conductor when the well is to be with total depth over 6000 m. That is because there is not other preventer that will enable the passage of the bit of 660,4 mm (26“) diameter, that is used to drill the hole for casing with diameter of 508 mm (20“).

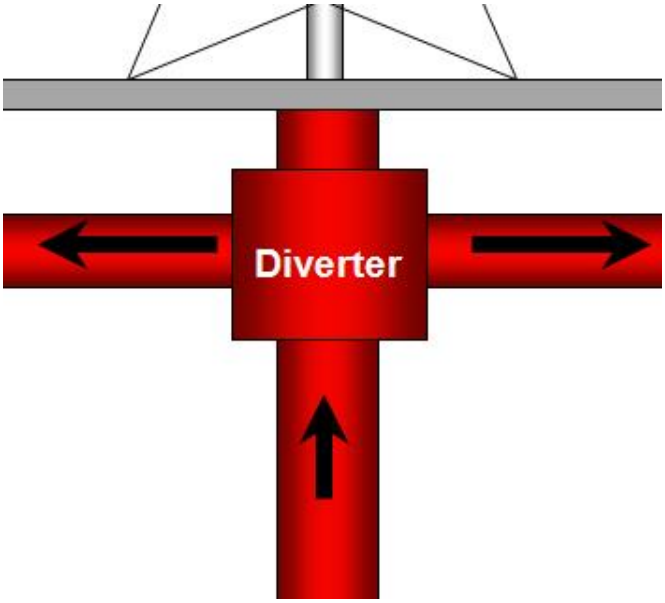



# HOLE PROBLEMS

An event which causes the drilling operation to stop is described as a Non-Productive Time (NPT) event. Pipe sticking and lost circulation are the two main events which cause NPT in the drilling industry. Well kicks, of course, require operations to stop and when they occur can result in a large NPT.

These problems are:, differential sticking, mechanical sticking, well kick, lost circulation and other problems .

## A-DIFFERENTIAL STICKING

During all drilling operations the drilling fluid hydrostatic pressure is designed and maintained at a level which exceeds the formation pore pressure by usually 200 psi. In a permeable formation, this pressure differential (overbalance) results in the flow of drilling fluid filtrates from the well to the formation. As the filtrate enters the formation the solids in the mud are screened out and a filter cake is deposited on the walls of the hole. The pressure differential across the filter cake will be equal to the overbalance. When the drillstring comes into contact with the filter cake, the portion of the pipe which becomes embedded in the filter cake is subjected to a lower pressure than the part which remains in contact with the drilling fluid. As a result, further embedding into the filter cake is induced. The drillstring will become differentially stuck if the overbalance and therefore the side loading on the pipe is high enough and acts over a large area of the drillstring. This is shown diagrammatically in **Figure below**



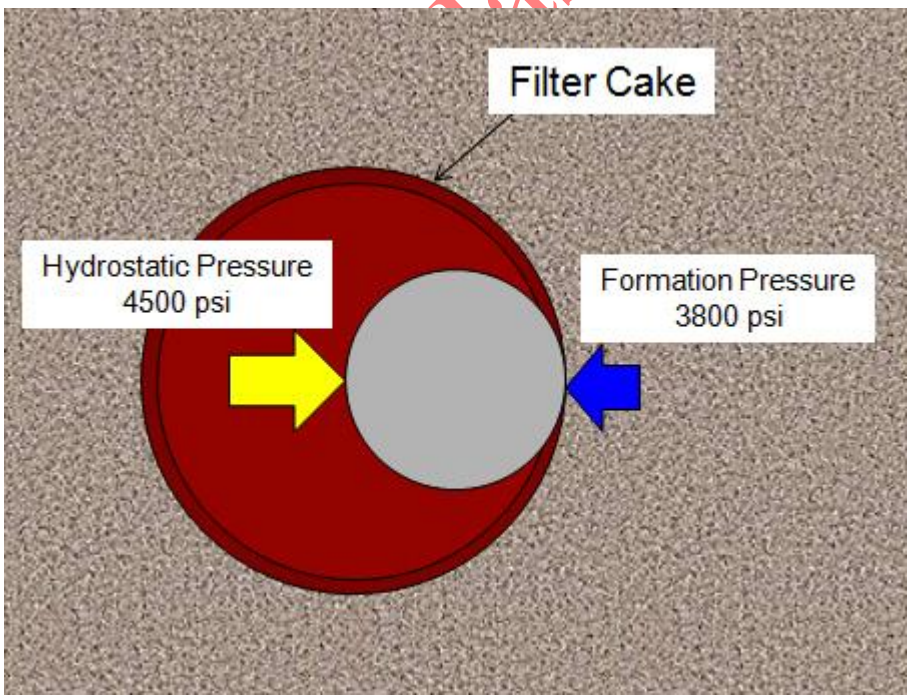

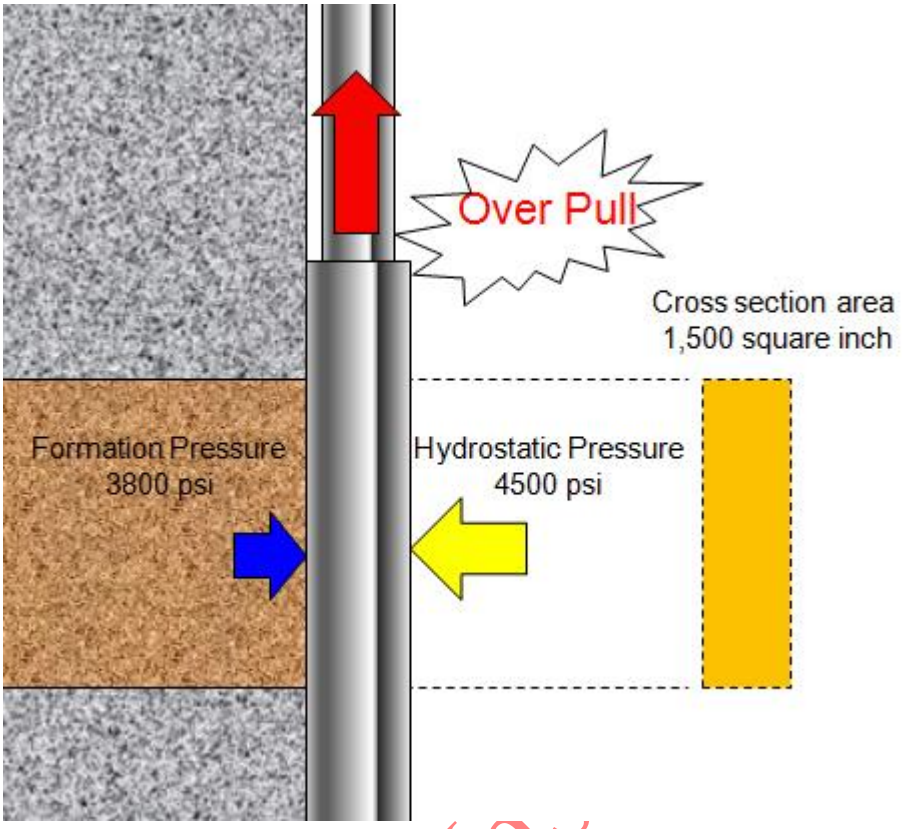




The signs of differential sticking are the clearest in the field. A pipe is differentially stuck if:

1-drillstring can not be moved at all, i.e. up or down or rotated
2. circulation is unaffected.

## B- MECHANICAL STICKING

In mechanical sticking the pipe is usually completely stuck with little or no circulation. In differential sticking, the pipe is completely stuck but there is full circulation.Mechanical sticking can occur as result of the hole packing off (or bridging) or due to formation

Hole pack off (bridging) can be caused by any one or a combination of the following processes:
1. Settled cuttings due to inadequate hole cleaning
2. Shale instability
3. Unconsolidated formations

**SHALE INSTABILITY**
Shale represents 70% of the rocks encountered whilst drilling oil and gas wells. Also shale instability is by far the most common type of wellbore instability. Shales are classified as being either brittle or swelling.

Brittle shales tend to fail by breaking into pieces and sloughing into the hole. Rig indications of brittle shale failure include:

• large amounts of angular, splintery cavings when circulating the well

• large amounts of hole fill.

Unconsolidated formations are usually encountered near the surface and include: loose sands, gravel and silts. Unconsolidated formations have low cohesive strengths and will therefore collapse easily (**Figure below**) and flow into the wellbore in lumps and pack off the drillstring.

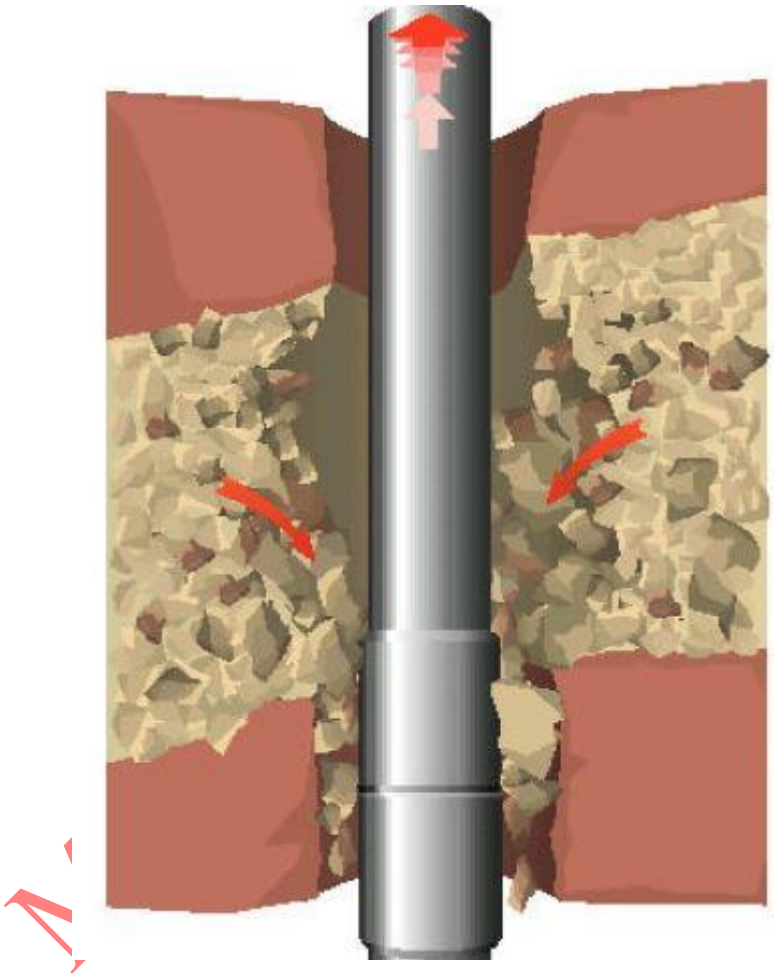

## C-WELL KICK

It is the entering of the formation fluid to the wellbore.

-This occur when the formation pressure exceeds the hydrostatic pressure.

-A blowout is uncontrolled kick.

Factors controlling the kicks sevirity:-

-permeability.

- underbalance

Reasons of kick are:

1-during drilling
Causes
a) mud weight too low
b) loss of circulation
c) bit encounters a zone with abnormally high pressure

2- During Tripping

a) not keeping the hole full
b) swabbing :A negative hydrostatic pressure causing reducing bottom hole pressure.

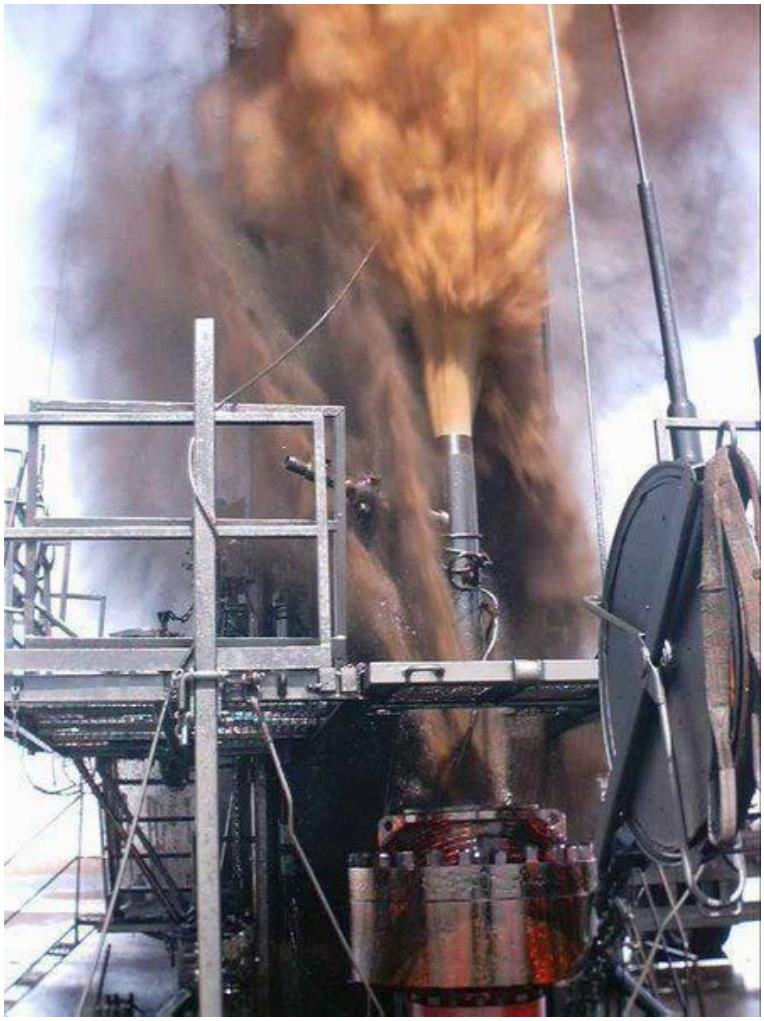

**D- BIT BALLING**

Bit balling occurs whilst drilling reactive shales which exhibit plastic properties. The problem occurs in poorly inhibited water-based muds when drilled shale particles adhere to the face of the drillbit, stabilisers and drillcollars. In practice bit balling can be recognised by:

• Reduced ROP as the bit cutting face is completely covered with a cake
• Increased pump pressure due to reduced annular diameter
• Blocked shaker screens with soft clays

**E- HOLE WASHOUT AND EROSION**

A hole washout occurs when the diameter of the hole drilled is greater than the bit size used to drill the hole. Hole erosion and washout occur across weak and soft formations as a result of using large flow rates resulting in excessive mud annular velocities. Washouts also occur across reactive shales which slough into the hole when contacting uninhibited water-based mud. Hole washouts cause several problems including difficulty in cleaning the hole, poor directional control, difficulty in running into the hole and most importantly result in very poor cement jobs. A number of casing buckling problems have been observed across severely washed-out holes which could not be cemented to the critical height required to prevent buckling.

**F- HOLE COLLAPSE AND HOLE FRACTURE**

It is important to note that the required mud weight should not just be based on the value required to balance the formation to prevent well kicks. Some formations require overbalance in excess of the usual 200 psi value in order to prevent hole collapse. This is particularly true for shale /mudstone section which could collapse if insufficient mud weight was used.

For sections containing sandstones and carbonates, high mud weights usually result in fractures which could lead to severe lost circulation. For hole sections containing both sandstones /carbonates and shales/mudstones, the mud weight chosen should be a balance between that required to prevent hole fracturing (maximum value) and the mud weight required to prevent hole collapse.

## G-LOST CIRCULATION

Lost circulation is the loss of mud or cement to the formation during drilling operations. Lost circulation causes:

- increased well costs, due to lost rig time and loss of expensive drilling fluid,
- loss of accurate hole monitoring.
- well control problems.

Mud losses can be experienced as a result of either natural losses, induced fractures during drilling operations or due to excessive overbalance.

## NATURAL LOSSES

Natural losses occur in rocks containing porosity and permeability or with natural fractures. Three types of formations can be recognised:

1. Coarse Sands and Gravel Beds **:** Usually occur near the surface where the formation is both porous and highly permeable: permeability in excess of 10 to 25 Darcy.

2. Natural Fissures or Fractures

Natural fissures and fractures usually occur in limestones and chalks which have been subjected to tectonic activities or to leaching by acids. Losses in the formations is usually severe.

3. Cavernous Formations

Caverns develop in limestone and dolomite formations ranging in size from fraction of an inch to large tunnels. They form as a result of ground water percolating through the formation and subsequent dissolving of the calcium. Total losses are usually experienced when drilling cavernous formations, resulting in the use of a special drilling technique called blind drilling. In blind drilling, drilling is carried out without returns to surface, usually using sea water.

## INDUCED FRACTURES

In formations where the difference between pore pressure and formation fracture pressure is low, fractures may be induced by either the drilling ECD or surge pressures, **Figure below.** Mud losses will occur through the induced fractures. The increased volume of cuttings in the annulus can increase the ECD to beyond the formation fracture pressure. This is especially true in surface holes

## CLASSES OF LOST CIRCULATION

Lost circulation can be grouped into four classes:

1. Seepage losses: From 1-10 bbl/hr and lost while circulating at the normal drilling circulate-ng rate
2. Partial losses: From 10-50 bbl/hr and lost while circulating at the normal drilling circulating rate
3. Severe losses: Greater than 50 bbl/hr and lost while circulating at the normal drilling circul-ating rate. In some cases, no losses may be seen if pumping stops indicating that the ECD is the cause of lost circulation.

4. Total losses: When the mud level in the annulus can not be seen or the hole can not be filled through the annulus. Total losses usually occur in cavernous formations.

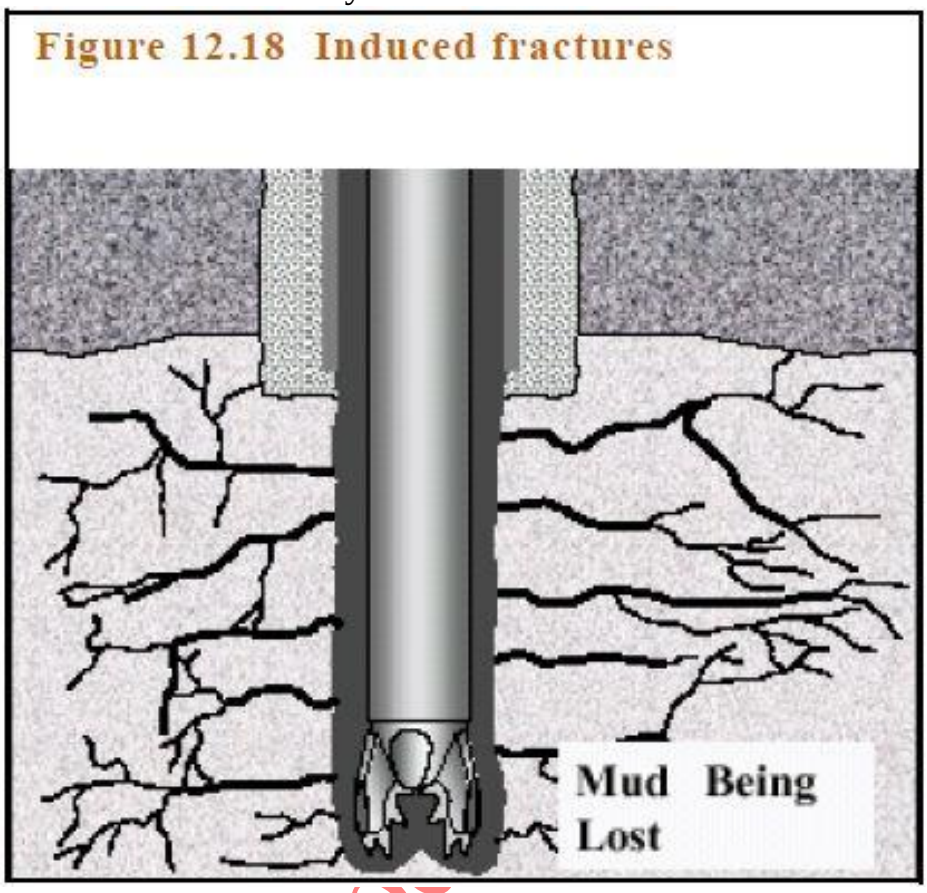


Figure 12.18 Induced fractures

# References:


1- Petroleum_Engineering_Drilling_And_Well Completions By Carl Gatlin.
2- Drilling Data Handbook, API.
3- Amco Drilling Manual, AMOCO Company.
4- Amoco Drilling Fluid Manual.
5- Applied Drilling Engineering, Adam T. Bourgoyne Jr. , Kieth K. Mellhiem, Martin E. Chenevert, F. S. Young Jr.
6- Rabia Hussain Well Engineering & Construction.
7- Handbook Of Oil And Gas Operations Vol II Drilling By Christopher Franklin.
8- Archer, J. S. And Wall, C. G. - Petroleum Engineering Principles And Practice.
9- Formulas And Calculations For Drilling Production And Workover Second Edition By Norton J. Lapeyrouse.
10- Oil Well Drilling Preparations By BP, E&P Defined Operating Practice.
11- Weatherford Cementing Program (Handbook).